A

AL60/AL90
Manual 1.5 en

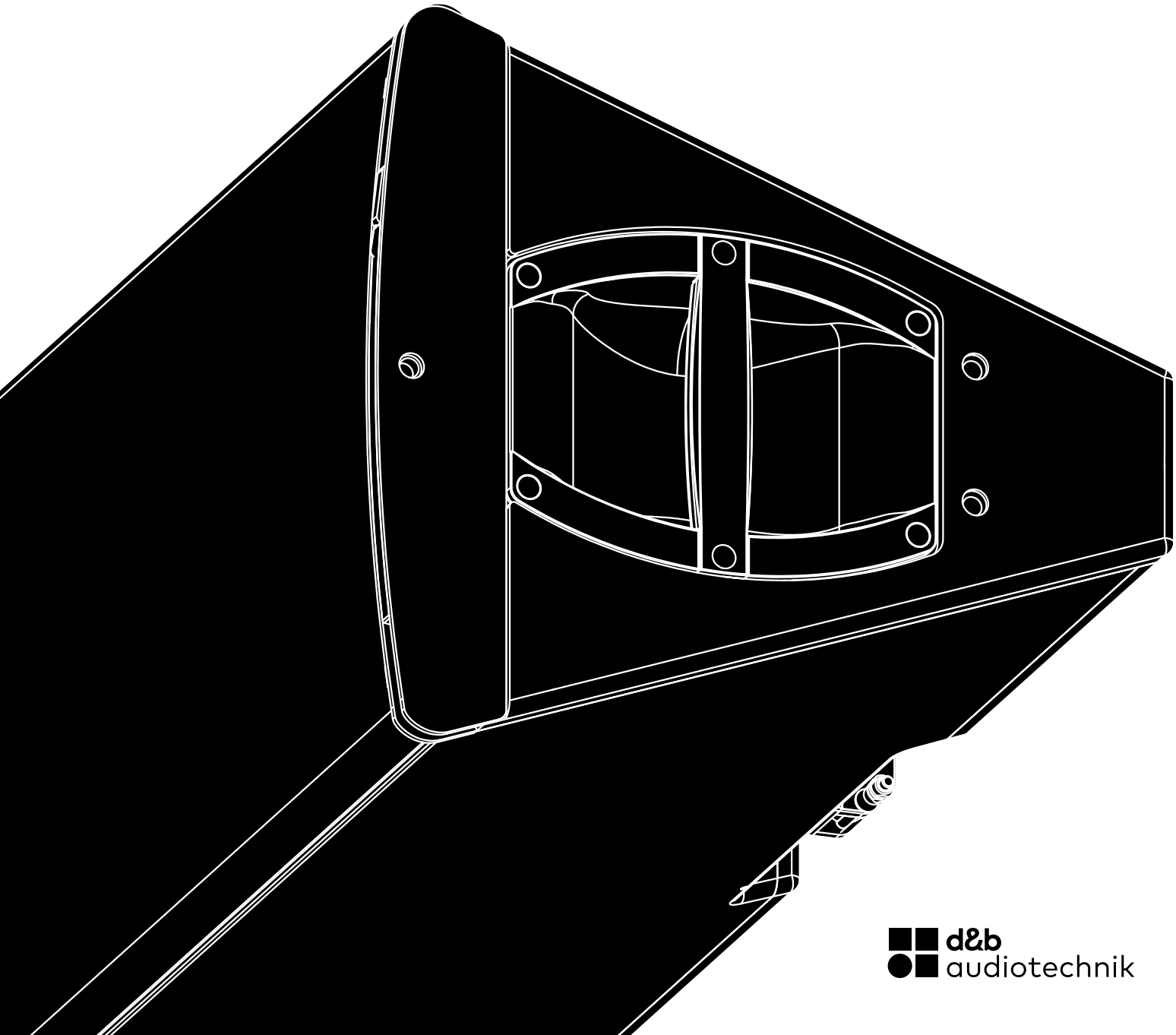

d&b audiotechnik

Notes on document version
All previous versions of this document are hereby no longer valid.

Version 1.5:
Revised edition with newly structured amplifier specification.

Refer to:
⇒ Chapter 2.1 “Product description” on page 5
and
⇒ Chapter 2.5 “Technical specifications” on page 10

General information

AL60/AL90 Manual

Version: 1.5 en, 10/2025, D2744.EN .01

Copyright © 2025 by d&b audiotechnik GmbH & Co. KG; all rights reserved.

Keep this document with the product or in a safe place so that it is available for future reference.

We recommend you to regularly check the d&b website for the latest version of this document.

When reselling this product, hand over this document to the new owner.

If you supply d&b products, please draw the attention of your customers to this document. Enclose the relevant documents with the systems. If you require additional documents for this purpose, you can order them from d&b.

d&b audiotechnik GmbH & Co. KG
Eugen-Adolff-Str. 134, D-71522 Backnang, Germany
T +49-7191-9669-0, F +49-7191-95 00 00

Contents

1 Safety precautions **4**
2 AL60/AL90 loudspeaker **5**
2.1 Product description 5
2.2 Connections 6
2.3 Operation 6
2.3.1 Controller settings 8
2.4 Dispersion characteristics 9
2.5 Technical specifications 10
3 Manufacturer's declarations **12**
3.1 Conformity of loudspeakers 12
3.2 WEEE Declaration (Disposal) 12

Potential risk of personal injury

Never stand in the immediate vicinity of loudspeakers driven at a high level. Professional loudspeaker systems are capable of causing a sound pressure level detrimental to human health. Seemingly non-critical sound levels (from approx. 95 dB SPL) can cause hearing damage if people are exposed to it over a long period.

In order to prevent accidents when deploying loudspeakers on the ground or when flown, please take note of the following:

- When setting up the loudspeakers or loudspeaker stands, make sure they are standing on a firm surface. If you place several systems on top of one another, use straps to secure them against movement.
- Only use accessories which have been tested and approved by d&b for assembly and deployment. Pay attention to the correct application and maximum load capacity of the accessories as detailed in our specific "Mounting instructions" or in our "Rigging manuals".
- Ensure that all additional hardware, fixings and fasteners used for deployment are of an appropriate size and load safety factor. Pay attention to the manufacturers' instructions and to the relevant safety guidelines.
- Regularly check the loudspeaker housings and accessories for visible signs of wear and tear, and replace them when necessary.
- Regularly check all load bearing mounting devices.

Potential risk of material damage

Loudspeakers produce a static magnetic field even if they are not connected or are not in use. Therefore make sure when erecting and transporting loudspeakers that they are nowhere near equipment and objects which may be impaired or damaged by an external magnetic field. Generally speaking, a distance of 0.5 m (1.5 ft) from magnetic data carriers (floppy disks, audio and video tapes, bank cards, etc.) is sufficient.

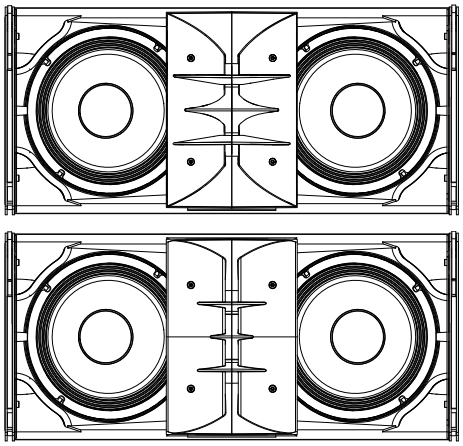

AL60/AL90 loudspeaker

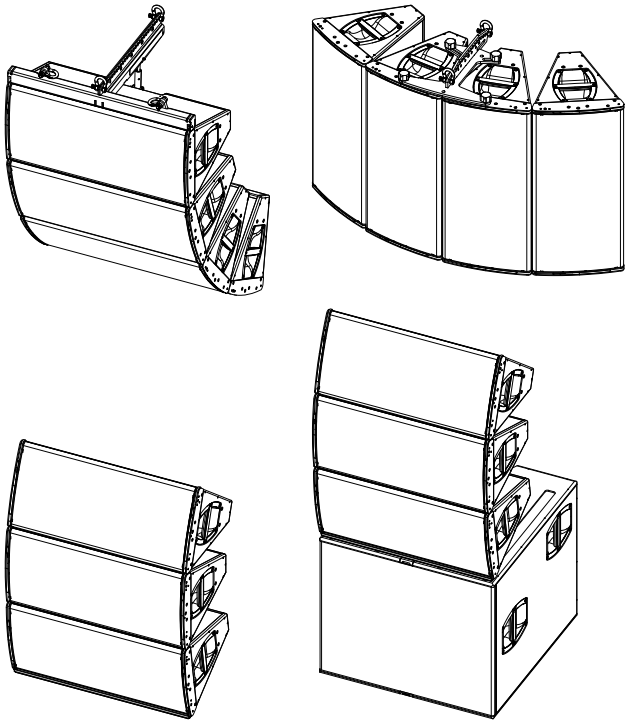

2.1 Product description

NOTICE!

Only operate d&b loudspeakers with correctly configured d&b amplifiers, otherwise there is a risk of damaging the loudspeaker components and the directional characteristics of the system cannot be achieved.

Recommended amplifiers:
D90/D80/D40/D25/25D/40D

The AL60 and AL90 are augmented array loudspeakers for medium scale sound reinforcement applications providing a 60° and 90° horizontal dispersion respectively.

Both loudspeakers are passive 2-way designs. They house 2 x 10" neodymium LF drivers, one 1.4" exit HF compression driver with a 3" diaphragm mounted to a dedicated wave shaping device and a passive crossover network. The wave segments of each cabinet couple without gaps and sum up coherently.

Splay angles between adjacent cabinets can be set in the range from 20° to 40° in 5° increments resulting in a total coverage of 50° up to 70° for two cabinets, with a maximum total coverage of 150° per array.

All components are arranged symmetrically around the center axis of the cabinet to produce a perfectly symmetrical dispersion pattern. This setup allows for a smooth crossover design with a well defined overlap of adjacent frequency bands resulting in a very consistent and accurate horizontal dispersion.
Due to the bipolar arrangement of the LF drivers, broadband horizontal directivity control of 60°/90° is maintained down to 550 Hz/370 Hz respectively. The frequency response extends from 60 Hz to 18 kHz.

The cabinets are constructed from marine plywood with an impact and weather protected PCP (Polyurea Cabinet Protection) finish. The front of the loudspeaker cabinet is protected by a rigid metal grill backed by an acoustically transparent fabric.
Each side panel incorporates a handle, while one side panel is equipped with three M10 threaded inserts to allow the secure attachment of a dedicated flying adapter.

A-Series rigging components
When the d&b Z5455 AL Flying frame is used, up to four loudspeaker modules can be flown in vertical columns producing a 60° or 90° constant directivity dispersion pattern in the horizontal plane.

AL60 and AL90 can also be deployed as a horizontal cluster of maximum four cabinets using the d&b Z5456 AL Flying adapter.

The d&b Z5458 AL Base plate allows ground stack setups of up to three TOP cabinets, either as pure TOP ground stacks or placed on top of applicable d&b subwoofers, such as the V-SUB or V-GSUB.

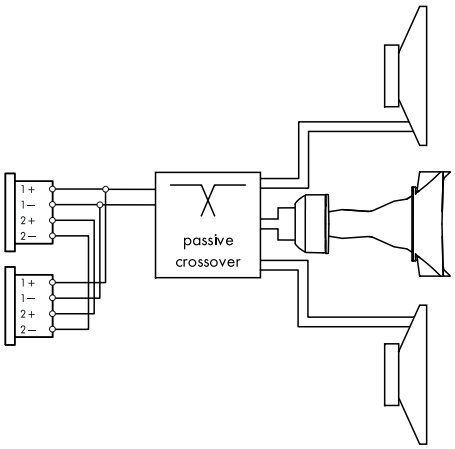

Connector wiring

2.2 Connections

The cabinets are fitted with NLT4 F/M connectors. All four pins of both connectors are wired in parallel. The cabinet uses the pin assignments 1+/1–. Pins 2+/2– are designated to actively driven subwoofers. Using one connector as the input, the second connector allows for direct connection to a second cabinet.

The cabinets can be supplied with 2 x NL4 M connectors as an option.

d&b LoadMatch

With the d&b four channel amplifier platform, the LoadMatch function enables the amplifier to electrically compensate for the properties of the loudspeaker cable used without the need for an additional sense wire. For applicable loudspeakers, LoadMatch is therefore independent of the connector type used.

2.3 Operation

Amplifier output mode(s): Dual Channel or Mix TOP/SUB		
Application	**Setup**	**Cabinets per channel**
AL60	AL60 PS AL60 Out AL60 In	2 2 2
	AL60 AP	1
AL90	AL90 PS AL90 Out AL90 In	2 2 2
	AL90 AP	1

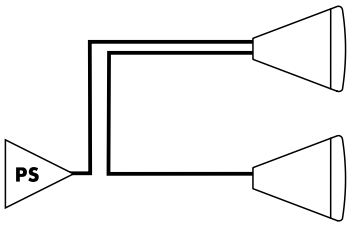

PS setup

The PS setup (**P**oint **S**ource) provides dedicated signal processing when AL60/AL90 cabinets are used in stand-alone applications.

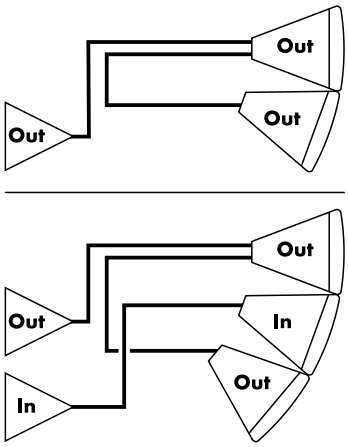

Out/In setups (MDC)

The MDC (**M**idrange **D**irectivity **C**ontrol) function compensates for constriction and uneveness (mid-range lobing) caused by the size and geometry of an array within the 200 Hz to 2 kHz frequency range in arrays of three or four loudspeakers.

MDC provides even distribution of the lower-mid frequency range, matching the high frequency dispersion set through typical array configurations, independent of the splay angle settings.

MDC uses two setups:
Out for 'outer' cabinets and **In** for 'inner' cabinets.

For two loudspeakers, the **Out** setup is recommended.

For three or four loudspeakers the **Out** setup is used for the outer two cabinets of an array, while the **In** setup is used for the inner one or two cabinets.

Two loudspeakers of the same type (AL60 or AL90) can be linked and then be driven by one amplifier channel.

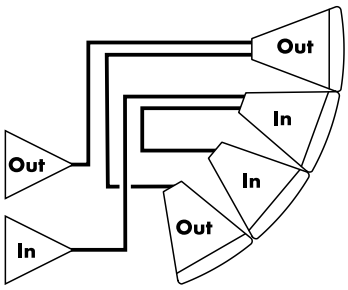

Note: Mixed A-Series array
A mixed deployment of different A-Series loudspeakers within the same array is only recommended for vertical arrays and when ArrayProcessing is used. This is due to the differing crossover functions between AL60 and AL90 that would otherwise lead to unexpected acoustic results.

For mixed arrays consisting of AL60 and AL90 cabinets, observe the dedicated setup for each loudspeaker type and the required wiring ⇒ required amplifier channels.

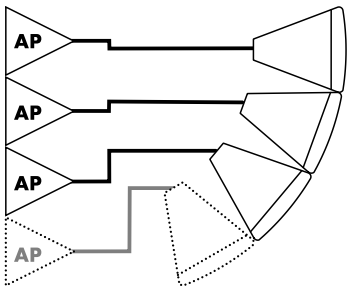

AP setup

For vertical arrays consisting of a minimum of three cabinets, the AP setup can be used.

The AP setup contains the AP data that is generated by the ArrayCalc simulation software and transferred to the applicable amplifiers via the d&b Remote network (OCA/AES70) using R1.

As soon as the data has been sent to the amplifiers, the AP setup is automatically activated.

2.3.1 Controller settings

Depending on the loudspeaker setup selected, the CUT, HFA, CPL and HFC functions are available for acoustic adjustment.

CUT mode

Set to CUT, a high pass filter with a 95 Hz cut off frequency is inserted in the controller signal path. The AL60/AL90 are now configured for use with actively driven d&b V-SUB or V-GSUB subwoofers.

HFA mode (PS setup only)

In HFA mode (High Frequency Attenuation), the HF response of the system is rolled off. HFA provides a natural, balanced frequency response when a cabinet is placed close to listeners in near field or delay use.

High Frequency Attenuation begins gradually at 1 kHz, dropping by approximately 3 dB at 10 kHz. This roll off mimics the decline in frequency response experienced when listening to a system from a distance in a typically reverberant room or auditorium.

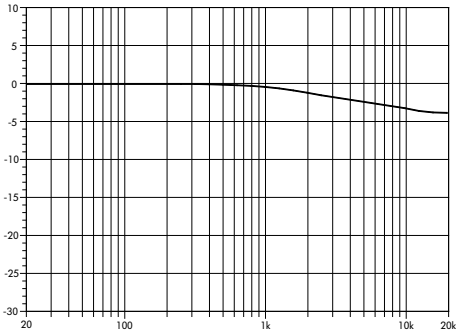

Frequency response correction in HFA mode*
*schematic diagram

CPL function

The CPL (Coupling) function compensates for coupling effects between the cabinet and close boundary surfaces. CPL begins gradually around 1 kHz, with the maximum attenuation below 400 Hz. To achieve a balanced frequency response, the CPL function can be set to dB attenuation values between 0 and –9.

Positive CPL values create an adjustable low frequency boost (0 to +5 dB) at around 65 Hz and can be set when the system is used in full range mode without subwoofers.

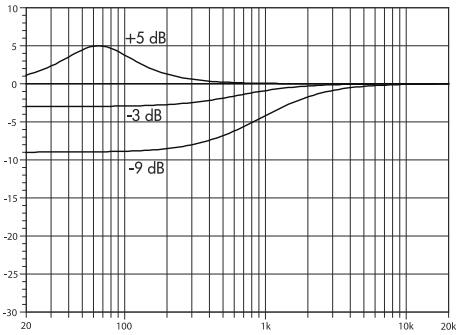

Frequency response correction of the CPL function*
*schematic diagram

HFC function

Selecting the HFC (High Frequency Compensation) function compensates for loss of high frequency energy due to absorption in air when loudspeakers are used to cover far field listening positions.

The HFC function has two settings (HFC1, HFC2) for different distances the cabinets need to cover. The settings should be used selectively; HFC1 for cabinets covering distances larger than 15 m (49 ft) and HFC2 for those covering distances larger than 25 m (82 ft).

The compensation is adjusted for a typical relative humidity of 40 %. With lower humidity the absorption by air increases therefore the distances where the respective HFC setting provides a correct equalization are shorter than indicated above.

Using the HFC function provides the correct sound balance between close and remote audience areas, whilst all amplifiers driving the array can be fed with the same signal.

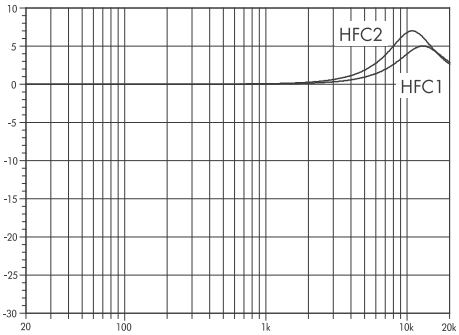

Frequency response correction of the HFC function*
*schematic diagram

2.4 Dispersion characteristics

The graphs below show the horizontal and vertical dispersion angles over frequency plotted using lines of equal sound pressure (isobars) at –6 dB and –12 dB. The nominal horizontal dispersion is maintained down to 550 Hz (AL60)/370 Hz (AL90).

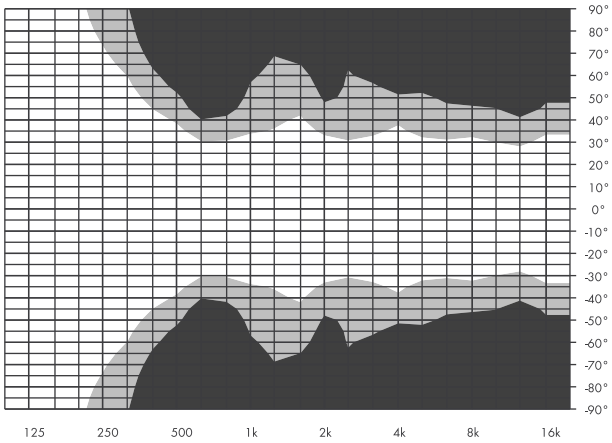

AL60 horizontal isobars

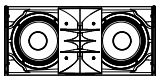

AL60
horizontal setup

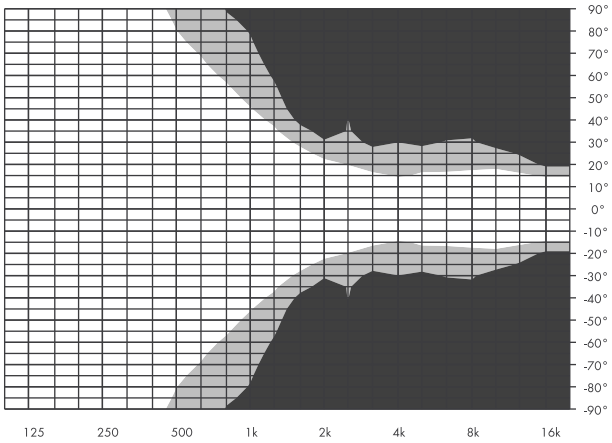

AL60 vertical isobars

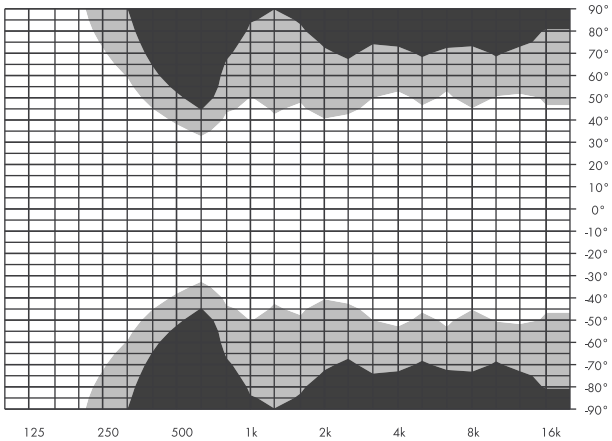

AL90 horizontal isobars

AL90
horizontal setup

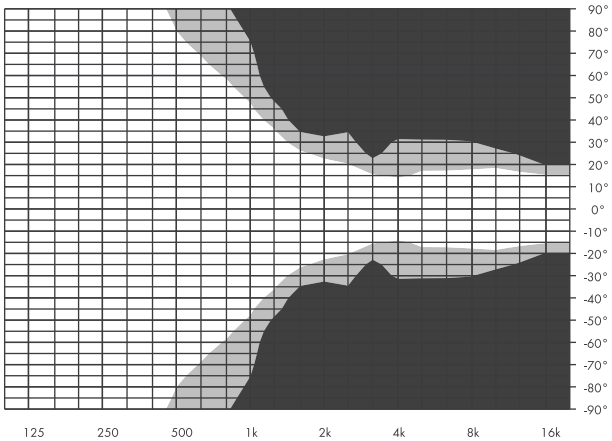

AL90 vertical isobars

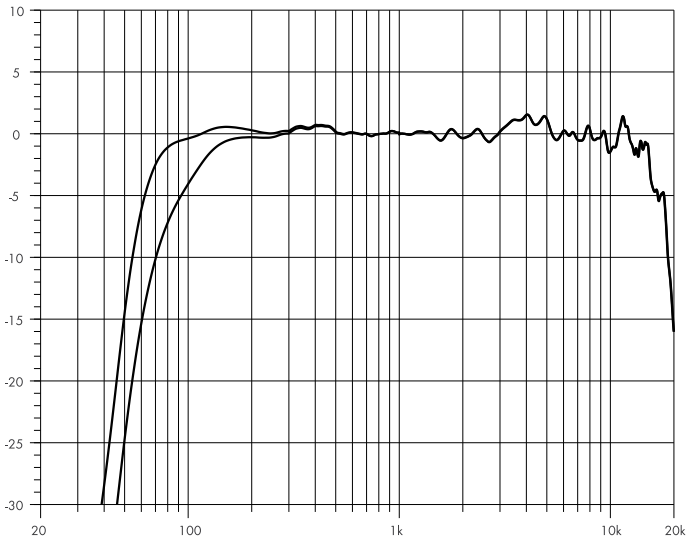

AL60 frequency response
Point **S**ource (**PS**) setup, standard and CUT modes

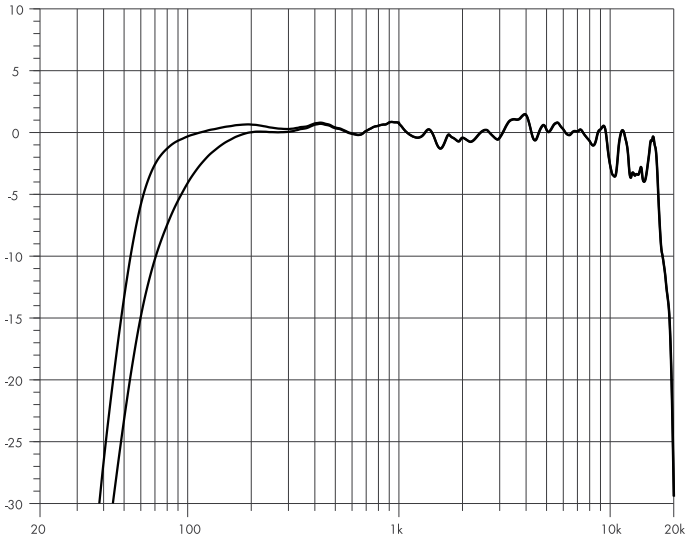

AL90 frequency response
Point **S**ource (**PS**) setup, standard and CUT modes

2.5 Technical specifications

System data

Frequency response (–5 dB standard) .....60 Hz - 18 kHz
Frequency response (–5 dB CUT mode) .....95 Hz - 18 kHz
Frequency response (–10 dB standard, IEC60268) .....55 Hz - 19 kHz
Frequency response (–10 dB CUT mode, IEC60268) .....70 Hz - 19 kHz
Max. SPL (Peak, 1 m, free field, pink noise with crest factor 4) .....
with D25/D20/25D/30D .....138 dB
with D90/D80/D40/40D .....139 dB

Loudspeaker data

Nominal impedance ..... 8 ohms
Power handling capacity (RMS/peak 10 ms) .....400/1800 W
Nominal dispersion angle (h x v - horizontal setup) AL60 .....60° x 30°
Nominal dispersion angle (h x v - horizontal setup) AL90 .....90° x 30°
Components .....2 x 10" LF driver with neodymium magnet
.....1 x 1.4" exit compression driver with 3" coil
..... Passive crossover network
Connections ..... NLT4 F/M
..... optional 2 x NL4 M
Pin assignment ..... NLT4 F/M and NL4 M: 1+/1–
Weight ..... 23 kg (51 lb)

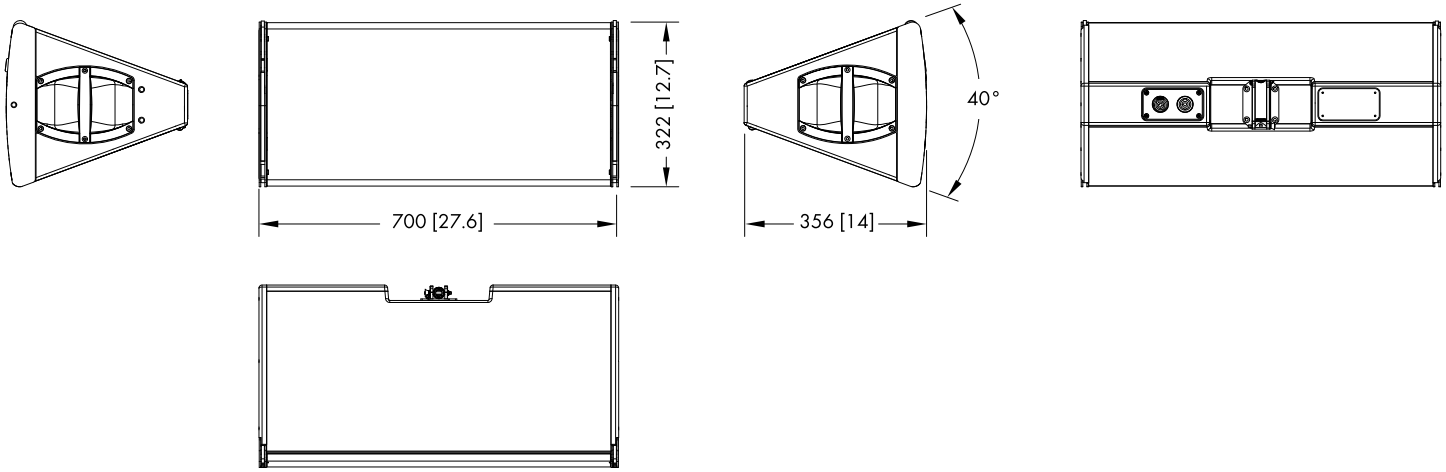

AL60/AL90 cabinet dimensions in mm [inch]

3.1 Conformity of loudspeakers

This declaration applies to:

- **d&b Z0730 AL60 loudspeaker**
- **d&b Z0731 AL90 loudspeaker**

by d&b audiotechnik GmbH & Co. KG.

All product variants are included, provided they correspond to the original technical version and have not been subject to any later design or electromechanical modifications.

We herewith declare that said products are in conformity with the provisions of the respective directives including all applicable amendments.

Detailed and applicable declarations are available on request and can be ordered from d&b or downloaded from the d&b website at www.dbaudio.com.

3.2 WEEE Declaration (Disposal)

Electrical and electronic equipment must be disposed of separately from normal waste at the end of its operational lifetime.

Please dispose of this product according to the respective national regulations or contractual agreements. If there are any further questions concerning the disposal of this product, please contact d&b audiotechnik.

WEEE-Reg.-Nr. DE: 13421928

D2744.EN.01, 10/2025 © d&b audiotechnik GmbH & Co. KG

d&b audiotechnik