B

Bi6-SUB
Manual 1.3 en

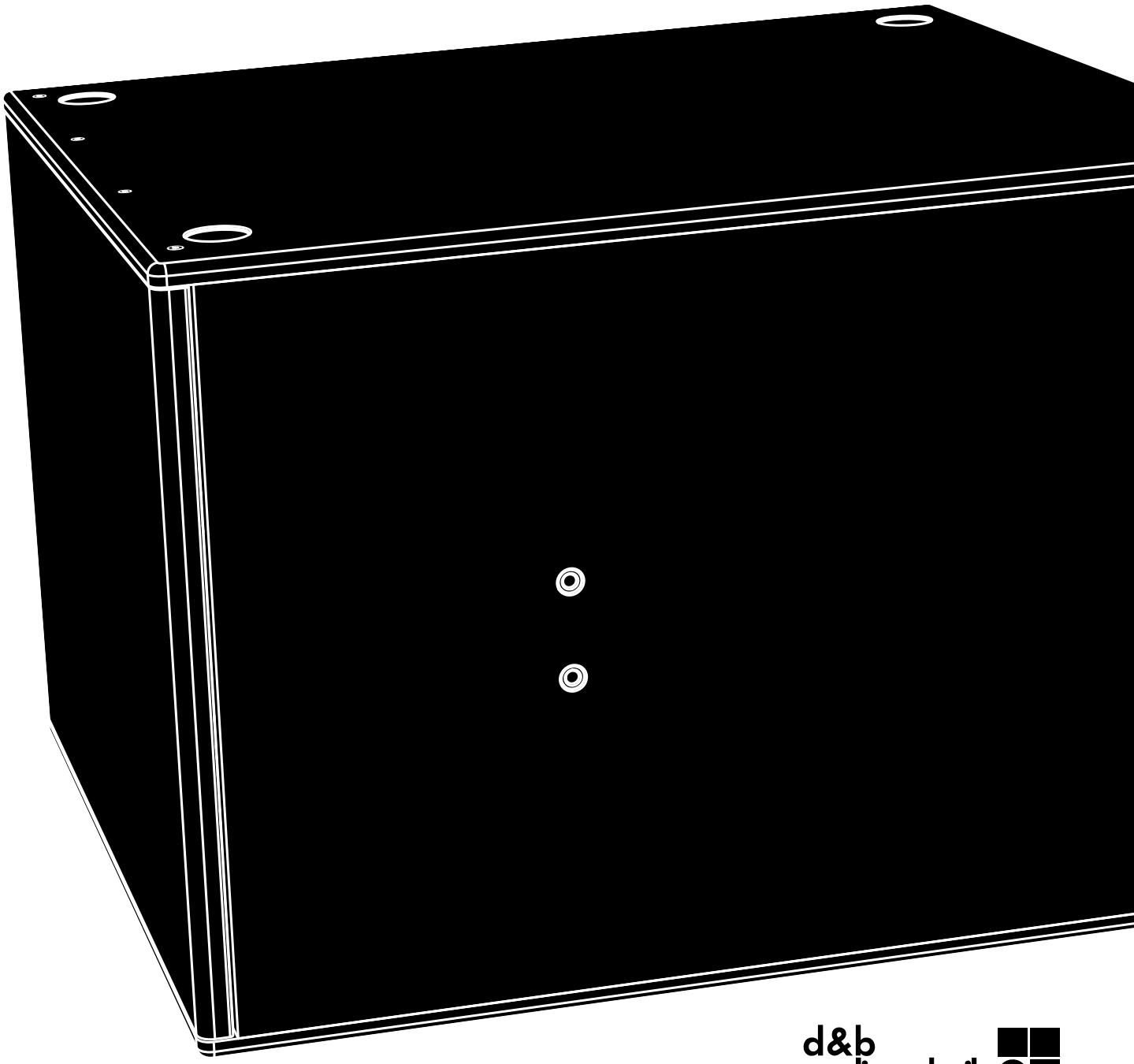

d&b audiotechnik®

General information

Bi6-SUB Manual

Version: 1.3 en, 10/2018, D2716.EN .01

Copyright © 2018 by d&b audiotechnik GmbH & Co. KG; all rights reserved.

Keep this document with the product or in a safe place so that it is available for future reference.

We recommend you to regularly check the d&b website for the latest version of this document.

When reselling this product, hand over this document to the new owner.

If you supply d&b products, please draw the attention of your customers to this document. Enclose the relevant documents with the systems. If you require additional documents for this purpose, you can order them from d&b.

d&b audiotechnik GmbH & Co. KG
Eugen-Adolff-Str. 134, D-71522 Backnang, Germany
T +49-7191-9669-0, F +49-7191-95 00 00

Contents

1 Safety precautions **4**
1.1 Information regarding the use of loudspeakers 4
2 Bi6-SUB loudspeaker **5**
2.1 Product description 5
2.2 Connections 5
2.3 Operation 7
2.3.1 Controller settings 8
2.4 Technical specifications 9
3 Manufacturer's declarations **10**
3.1 EU conformity of loudspeakers (CE symbol) 10
3.1.1 WEEE Declaration (Disposal) 10

1.1 Information regarding the use of loudspeakers

Potential risk of personal injury

Never stand in the immediate vicinity of loudspeakers driven at a high level. Professional loudspeaker systems are capable of causing a sound pressure level detrimental to human health. Seemingly non-critical sound levels (from approx. 95 dB SPL) can cause hearing damage if people are exposed to it over a long period.

In order to prevent accidents when deploying loudspeakers on the ground or when flown, please take note of the following:

- When setting up the loudspeakers or loudspeaker stands, make sure they are standing on a firm surface. If you place several systems on top of one another, use straps to secure them against movement.
- Only use accessories which have been tested and approved by d&b for assembly and mobile deployment. Pay attention to the correct application and maximum load capacity of the accessories as detailed in our specific "Mounting instructions" or in our "Flying system and Rigging manuals".
- Ensure that all additional hardware, fixings and fasteners used for installation or mobile deployment are of an appropriate size and load safety factor. Pay attention to the manufacturers' instructions and to the relevant safety guidelines.
- Regularly check the loudspeaker housings and accessories for visible signs of wear and tear, and replace them when necessary.
- Regularly check all load bearing bolts in the mounting devices.

Potential risk of material damage

Loudspeakers produce a static magnetic field even if they are not connected or are not in use. Therefore make sure when erecting and transporting loudspeakers that they are nowhere near equipment and objects which may be impaired or damaged by an external magnetic field. Generally speaking, a distance of 0.5 m (1.5 ft) from magnetic data carriers (floppy disks, audio and video tapes, bank cards, etc.) is sufficient; a distance of more than 1 m (3 ft) may be necessary with computer and video monitors.

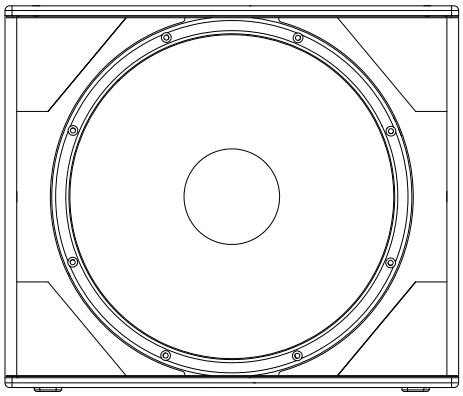

2.1 Product description

The Bi6-SUB is an actively driven, compact, high performance subwoofer.

The cabinet houses a long excursion 18" driver with a ferrite magnet in a bass-reflex design. Its frequency response extends from 37 Hz to 140 Hz.

The enclosure is constructed from marine plywood with an impact resistant black paint finish. The front of the cabinet is protected by a rigid metal grill backed by an acoustically transparent foam. Four rubber feet prevent cabinet movement and protect the bottom panel against scratching. Correspondingly shaped recesses in the top panel of the cabinet prevent cabinet movement when stacking Bi6-SUBs.

The cabinet side panels are each equipped with a pair of M10 threads to accept the Z5389 Horizontal bracket.

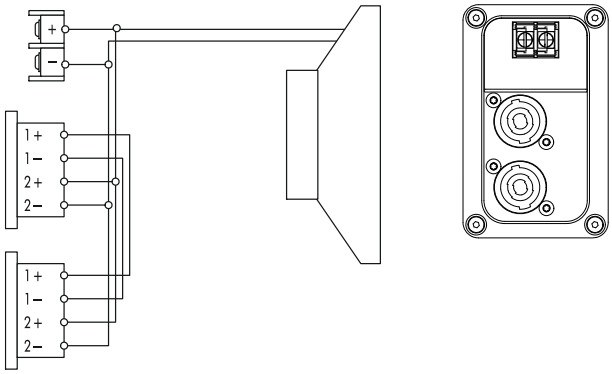

Connector wiring

2.2 Connections

The cabinet is fitted with a pair of NL4 M connectors and a two pole screw terminal block (ST). All four pins of both NL4 M connectors are wired in parallel. The cabinet uses the pin assignments 2+/2–. Pins 1+/1– are designated to full range cabinets.

Pin equivalents of the applicable connector options are listed in the table below.

NL4 M	1+	1–	2+	2–
ST	n.a.	n.a.	+	–

d&b SenseDrive

The SenseDrive feature within D12 amplifiers enables electrical compensation for the properties of the loudspeaker cable used. SenseDrive requires an additional sense wire. SenseDrive is therefore only available with EP5 connectors and 5-wire cabling for applicable loudspeakers.

> **Note:** When the D12 is operated in "Mix TOP/SUB mode", the SenseDrive function is available on the output B connector only.

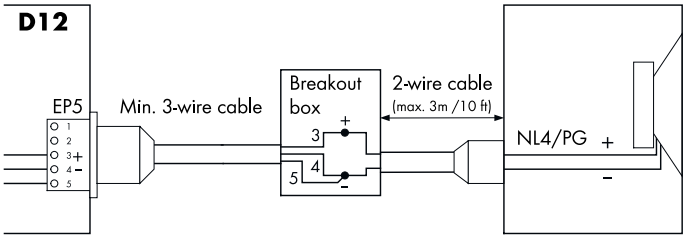

In permanent installations SenseDrive can also be applied to cabinets with NL4 connectors or fixed cable option (PG). The connection of the negative signal wire (EP5 pin 4 of the respective D12 output) to the SenseDrive wire (EP5 pin 5 of respective D12 output) is made in a breakout box close to the loudspeaker cabinet. For an uncompromising SenseDrive performance the connection should be done not more than 3 m (10 ft) away from the loudspeaker.

d&b LoadMatch

Starting with the D80 amplifier, the LoadMatch function enables the amplifier to electrically compensate for the properties of the loudspeaker cable used without the need for an additional sense wire. For applicable loudspeakers, LoadMatch is therefore independent of the connector type used.

Fixed cable connection

The Bi6-SUB loudspeaker is supplied with a cover plate **[1]** and a rubber grommet feed through **[2]**. For indoor operation, these items can be used to hide the connector panel, if required. For unprotected outdoor operation, the connector panel must be covered, i.e. both items must be used to achieve an IP degree of protection of IP34.

To install the fixed cable connection, proceed as follows:

Tools required: Philips screw driver (#PH2).

1. Remove the knockout opening in the cover plate **[1]** and attach the rubber grommet **[2]** correspondingly.
2. Insert the connection cable through the rubber grommet.
3. Undo the four screws of the connector panel.
4. Connect the cable wires to the screw terminal.
   ⇒ Observe the correct polarity!
5. Push the cover plate towards the connector panel until it fits into place.
6. Finally fix the cover plate together with the connector panel using all screws.

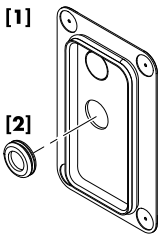

Step 1

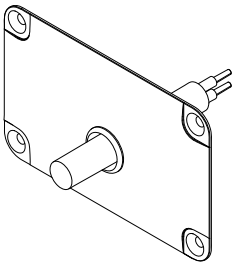

Step 2

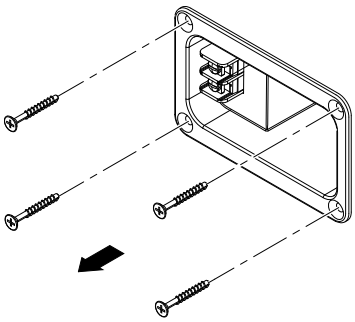

Step 3

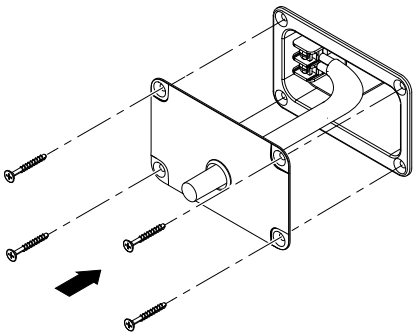

Step 4/5

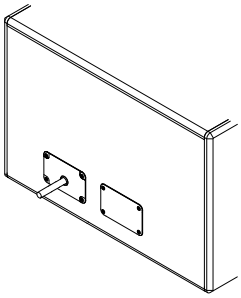

Step 6

Installing the fixed cable connection

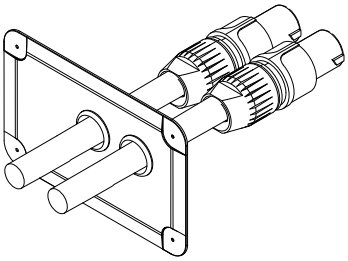

NL4 cable connection with cover plate [1]

NL4 connection with cover plate

The two NL4 connector sockets of the cabinet's connector panel are located in a recess to allow the use of the cover plate **[1]** together with NL4 cable connectors, as shown in the graphic opposite.

> **Note:** Neutrik NL4FC type connectors must be used for this option.

The cover plate is equipped with two knockout openings to allow daisy chaining of the loudspeaker.
To use the NL4 connection, proceed in the same manner as described in the previous section .

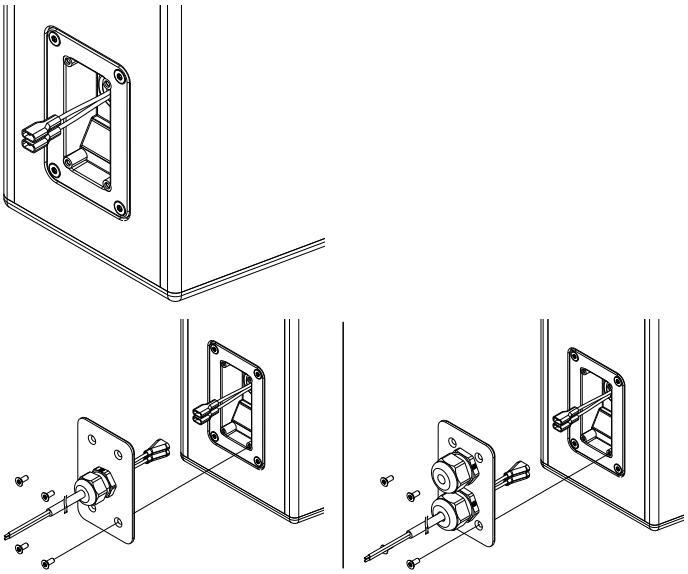

Faston type connector, male single PG (standard), dual PG (optional)

WR option (Weather Resistance)
A number of d&b loudspeakers are available in special options suitable for different types of installed applications and environmental conditions. The following options are available:

- Weather resistant (WR): This option is suitable for outdoor use. The cabinets have an impact and weather protected black PCP (Polyurea Cabinet Protection) finish.
- Sea water resistant (SWR): This option is suitable for outdoor use, especially in wet and acid or salty environments.

WR cabinets are equipped with a recessed connector panel including a Faston type connector (2 x 6.3 mm, female). A cover plate which accepts single or dual PG cable glands (Type PG13.5 for cable diameters from 6 - 12 mm) is enclosed, as shown in the graphic opposite.

NOTICE!

The WR option enables operation of loudspeakers in changing ambient conditions, however it is not intended to enable permanent, unprotected operation of loudspeakers outdoors.

- Provide an additional cover over the loudspeakers.
- Aim the cabinets either horizontally or with a downward tilt.

To install the fixed connection cable, please proceed as follows:

Tools required: Screw driver (#T20).

Note: Observe the correct polarity of the cable
Brown (+) / Blue (–).

1. Insert the connection cable through the PG screwing and connect the male connector to the female connector.
2. Push the cover plate towards the connector panel until it fits into place.
3. Fix the cover plate to the connector panel using the four countersunk screws.

2.3 Operation

NOTICE!

Only operate d&b loudspeakers with a correctly configured d&b amplifier, otherwise there is a risk of damaging the loudspeaker components.

Applicable d&b amplifiers:
10D/30D/D80/D20/D12/D6.

Application	Setup	Cabinets per channel
Bi6-SUB Standard.	B6-SUB	2
Bi6-SUB INFRA	B6-INF (D80/D20/30D)	2

Within applicable d&b amplifiers, the controller setups are available in Dual Channel or Mix TOP/SUB mode.

2.3.1 Controller settings

Within the B6-SUB standard setup, for acoustic adjustment the 100 Hz and CSA function can be selected.

100 Hz circuit

With the 100 Hz circuit selected, the upper operating frequency of the system is reduced from 140 Hz to 110 Hz.

It can be used when actively driven Bi6-SUB subwoofers are used to supplement TOP cabinets operated in full range mode, for example in a distributed sound system. The 100 Hz mode can also be used to compensate for the effect of close coupling between the Bi6-SUB and TOP cabinets operated in CUT mode.

CSA mode

The CSA (**C**ardioid **S**ubwoofer **A**rray) mode enables the combination of three or multiples of three subwoofer cabinets into an array which produces exceptional low frequency directivity control.

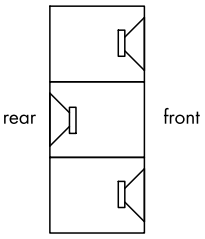

CSA Stack (example)

The amplifier channel for the center subwoofer of the array, which is physically pointed to the rear, has CSA selected. The forward facing cabinets are driven with an amplifier channel set to standard mode. The resulting cardioid behavior of the array will significantly reduce the energy radiated to the rear.

For further information, please refer to the d&b TI 330 Cardioid Subwoofer Array, which is available for download at www.dbaudio.com.

B6-INF setup

With the B6-INF setup selected, the upper operating frequency of the Bi6-SUB is reduced to 80 Hz. The Bi6-SUB can now be used to supplement applicable d&b loudspeaker systems operated in full range mode.

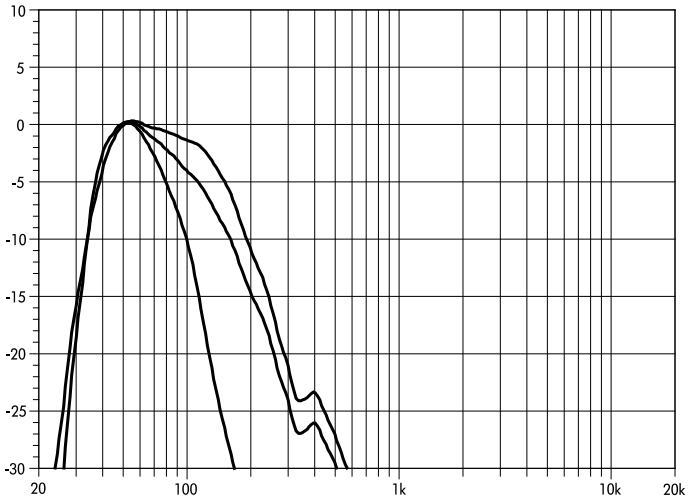

Bi6-SUB frequency response, standard, 100 Hz and INFRA modes

2.4 Technical specifications

System data

Frequency response (–5 dB standard) ..... 37 Hz - 140 Hz
Frequency response (–5 dB 100 Hz mode) ..... 37 Hz - 110 Hz
Frequency response (–5 dB INFRA mode) ..... 35 Hz - 80 Hz
Max. sound pressure (1 m, free field) .....
with D6/10D ..... 128 dB
with D12/D20/30D ..... 131 dB
with D80 ..... 134 dB
..... (SPLmax peak, pink noise test signal with crest factor of 4)

Bi6-SUB loudspeaker

Nominal impedance ..... 8 ohms
Power handling capacity (RMS/peak 10 ms) ..... 500/2000 W
Components ..... 1 x 18" driver
Connections ..... 2 x NL4 M
..... WR option: Faston type connector (2 x 6.3mm)
Pin assignment ..... NL4 M: 2+ / 2–
..... WR option: Brown: (+) / Blue: (–)
Weight ..... 38 kg (84 lb)

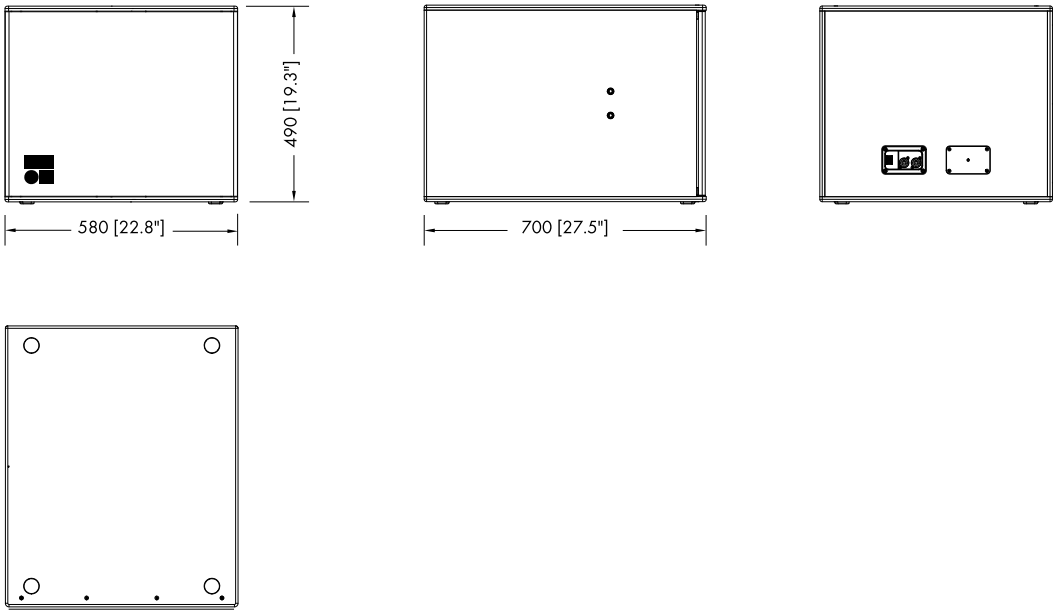

Bi6-SUB cabinet dimensions in mm [inch]

3.1 EU conformity of loudspeakers (CE symbol)

This declaration applies to:

d&b Bi6-SUB loudspeaker, Z0711

manufactured by d&b audiotechnik GmbH & Co. KG.

All production versions of these types are included, provided they correspond to the original technical version and have not been subject to any later design or electromechanical modifications.

We herewith declare that said products are in conformity with the provisions of the respective EC directives including all applicable amendments.

A detailed declaration is available on request and can be ordered from d&b or downloaded from the d&b website at www.dbaudio.com.

3.1.1 WEEE Declaration (Disposal)

Electrical and electronic equipment must be disposed of separately from normal waste at the end of its operational lifetime.

Please dispose of this product according to the respective national regulations or contractual agreements. If there are any further questions concerning the disposal of this product, please contact d&b audiotechnik.

D2716.EN.01, 10/2018 © d&b audiotechnik GmbH & Co. KG

d&b audiotechnik®