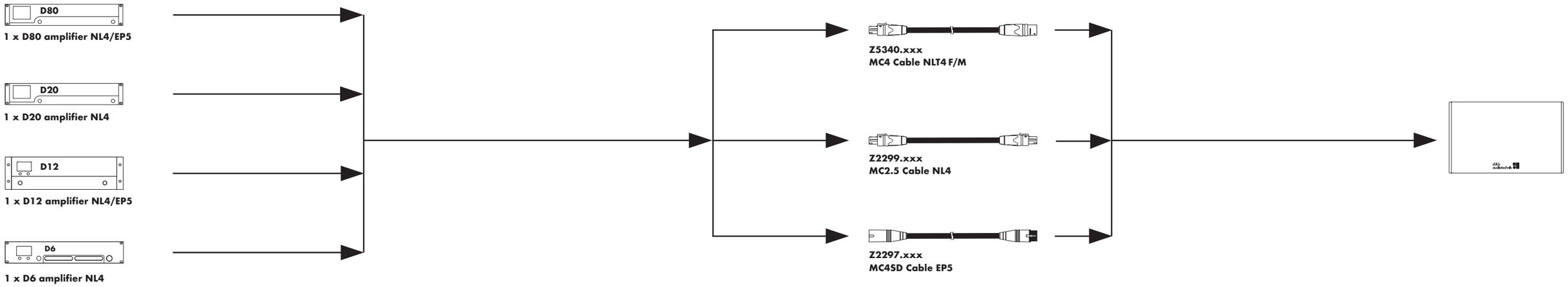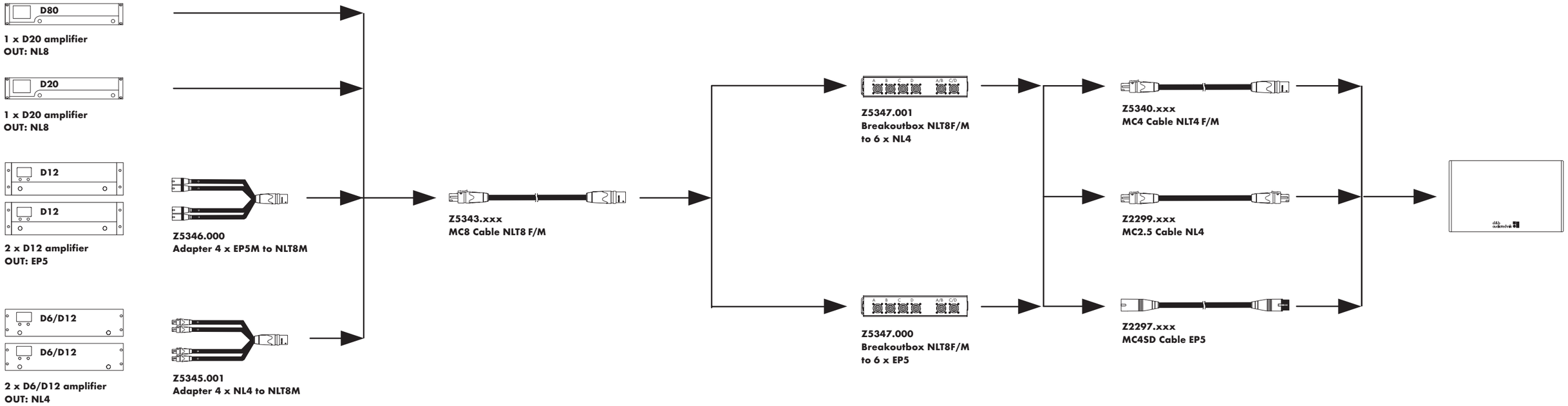The Stage monitors cables and adaptors