SL

KSLi-SUB/KSLi-GSUB
Manual 1.6 en

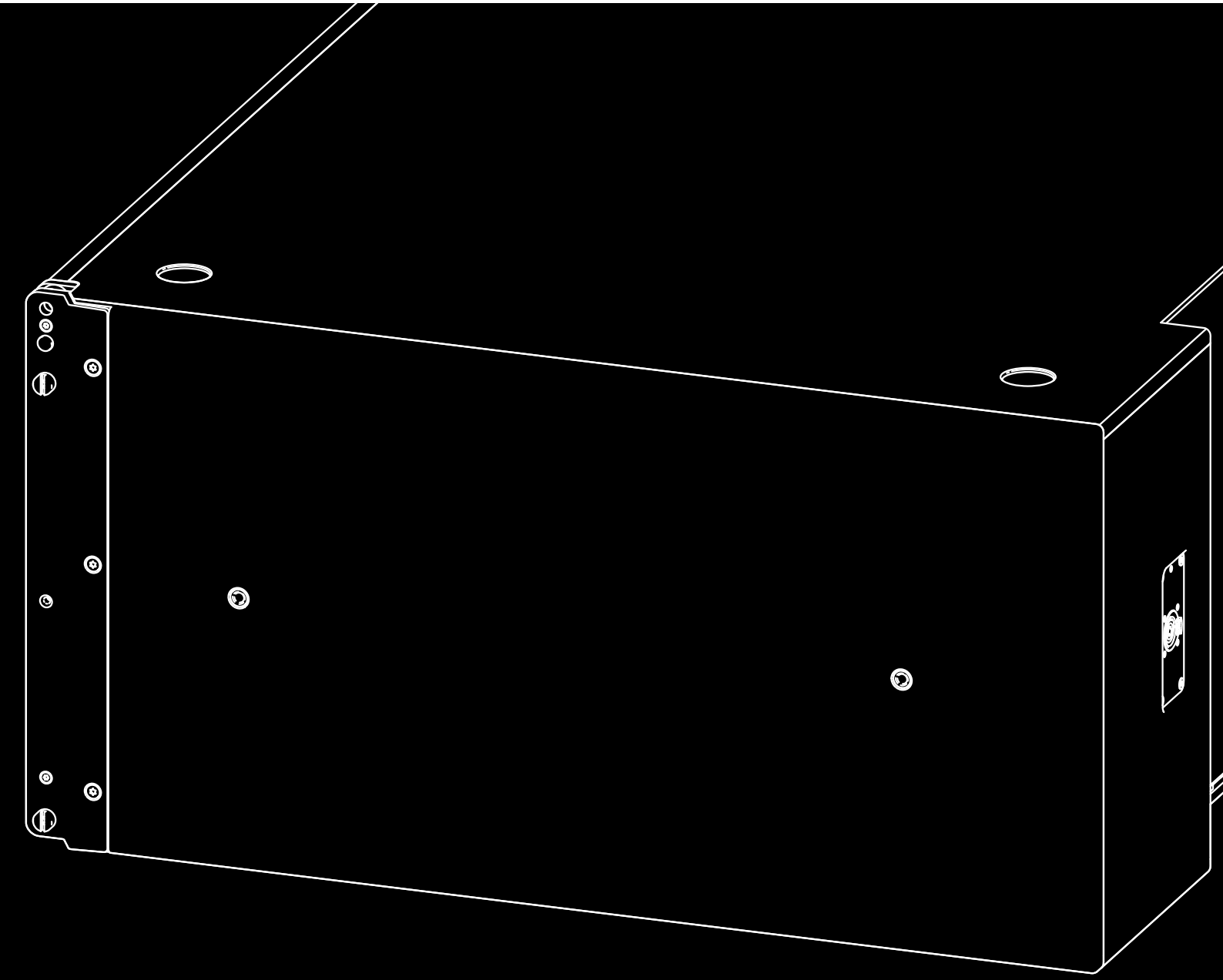

d&b audiotechnik

Notes on document version
All previous versions of this document are hereby no longer valid.

Version 1.6:
Revised edition with newly structured amplifier specification.

Refer to:
⇒ Chapter 2.1 “Intended use” on page 6
and
⇒ Chapter 2.4 “Technical specifications” on page 10

General information

KSLi-SUB/KSLi-GSUB Manual

Version: 1.6 en, 09/2026, D2738.EN .01

Copyright © 2026 by d&b audiotechnik GmbH & Co. KG; all rights reserved.

Keep this document with the product or in a safe place so that it is available for future reference.

When reselling this product, hand over this document to the new owner.

d&b audiotechnik GmbH & Co. KG
Eugen-Adolff-Str. 134, D-71522 Backnang, Germany
T +49-7191-9669-0, F +49-7191-95 00 00
docadmin@dbaudio.com, www.dbaudio.com

Contents

1 Safety precautions **4**
1.1 d&b ArrayCalc 5
2 KSLi-SUB/KSLi-GSUB loudspeaker **6**
2.1 Intended use 6
2.2 Connections 7
2.3 Operation 8
2.3.1 Controller settings 8
2.4 Technical specifications 10
3 Manufacturer's declarations **11**
3.1 Conformity of loudspeakers 11
3.2 WEEE Declaration (Disposal) 11

Potential risk of personal injury

Never stand in the immediate vicinity of loudspeakers driven at a high level. Professional loudspeaker systems are capable of causing a sound pressure level detrimental to human health. Seemingly non-critical sound levels (from approx. 95 dB SPL) can cause hearing damage if people are exposed to it over a long period.

In order to prevent accidents when deploying loudspeakers on the ground or when flown, please take note of the following:

- When setting up the loudspeakers or loudspeaker stands, make sure they are standing on a firm surface. If you place several systems on top of one another, use straps to secure them against movement.
- Only use accessories which have been tested and approved by d&b for assembly and deployment. Pay attention to the correct application and maximum load capacity of the accessories as detailed in our specific "Mounting instructions" or in our "Rigging manuals".
- Ensure that all additional hardware, fixings and fasteners used for deployment are of an appropriate size and load safety factor. Pay attention to the manufacturers' instructions and to the relevant safety guidelines.
- Regularly check the loudspeaker housings and accessories for visible signs of wear and tear, and replace them when necessary.
- Regularly check all load bearing mounting devices.

Potential risk of material damage

Loudspeakers produce a static magnetic field even if they are not connected or are not in use. Therefore make sure when erecting and transporting loudspeakers that they are nowhere near equipment and objects which may be impaired or damaged by an external magnetic field. Generally speaking, a distance of 0.5 m (1.5 ft) from magnetic data carriers (floppy disks, audio and video tapes, bank cards, etc.) is sufficient.

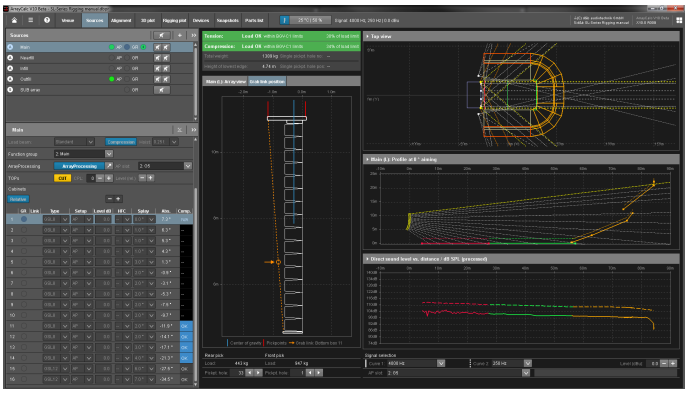

d&b ArrayCalc

1.1 d&b ArrayCalc

For both safety and acoustic reasons, d&b line arrays must be designed using the d&b ArrayCalc simulation software. The software is available as a native stand-alone application for both Microsoft Windows and Mac OS X operating systems and can be downloaded at www.dbaudio.com.

Detailed information on how to use and operate ArrayCalc is provided by the Help system of the software. To access the Help system, press F1 or select the Help button (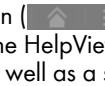) from the ArrayCalc toolbar. This will launch the HelpViewer which provides an overview of the program as well as a search function and direct access to the related topics.

In addition, ArrayCalc will provide you with typical array configurations within the permitted load limits and will help you get familiar with the mechanical load conditions and limitations.

d&b TI 385

Further information on line array design can be found in "TI 385 d&b Line array design, ArrayCalc". The TI is supplied with the software or can be downloaded from the d&b website at www.dbaudio.com.

d&b Seminar

We also recommend you to attend the regularly hosted d&b Line array training seminars. Further information regarding the d&b seminars and a seminar schedule can also be found on the d&b website at www.dbaudio.com.

d&b Video tutorials

In addition, d&b provides related video tutorials which can also be found on the d&b website at www.dbaudio.com or www.sl-series.com.

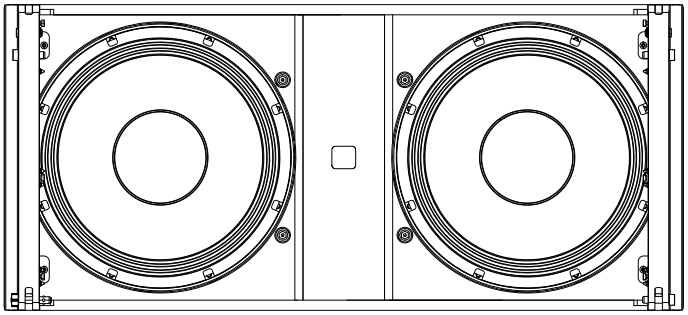

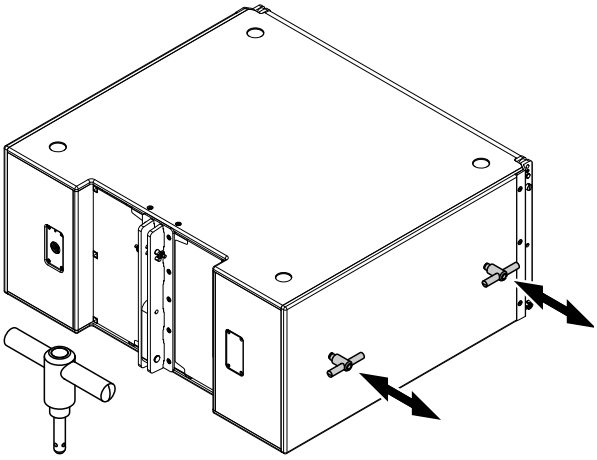

2.1 Intended use

NOTICE!

Only operate d&b SL-Series loudspeakers with the specified and correctly configured d&b amplifiers, otherwise there is a risk of damaging the loudspeaker components and the directional characteristics of the system cannot be achieved.

Recommended amplifiers:
D90/D80/D40/40D

Product description
The KSLi-SUB and KSLi-GSUB are the installation specific cardioid subwoofers for the KSLi system. They can be used to supplement KSLi8 and KSLi12 cabinets, either flown (KSLi-SUB) or ground stacked (KSLi-GSUB).

When the Z5744 KSLi-SUB Mounting frame is used, KSLi-SUB cabinets can be flown as pure SUB columns or in mixed arrays in combination with KSLi-TOP cabinets using the additional Z5745 KSLi-SUB Mounting adapter.

Both cabinets are actively driven, 2-way bass-reflex designs housing three long excursion neodymium 15″ drivers. Two drivers face to the front while one driver radiates to the rear of the cabinet.

Front and rear drivers are driven by separate amplifier channels and operate in independent bass reflex chambers. Through its cardioid dispersion pattern, this setup avoids unwanted energy behind the system and greatly reduces the reverberant field at low frequencies providing highest accuracy in low frequency reproduction. The frequency response extends from 36 Hz to 105 Hz (33 Hz to 75 Hz - INFRA mode).

The cabinet enclosures are constructed from marine plywood and have an impact and weather protected PCP (Polyurea Cabinet Protection) finish. The front and rear of the cabinets are protected by rigid metal grills. Each side panel incorporates two slots to accept dedicated lifting pins (T-handles). During setup, these pins serve as a temporary lifting aid and can be inserted and locked when needed.
Four rubber feet prevent cabinet movement and protect the bottom panel against scratching. Correspondingly shaped recesses in the top panel of the cabinet prevent cabinet movement when stacking KSLi-GSUBs or KSLi-SUBs.

The KSLi-SUB cabinet incorporates front and rear rigging strands while the KSLi-GSUB comes without any rigging components and is intended for ground stacked purposes.

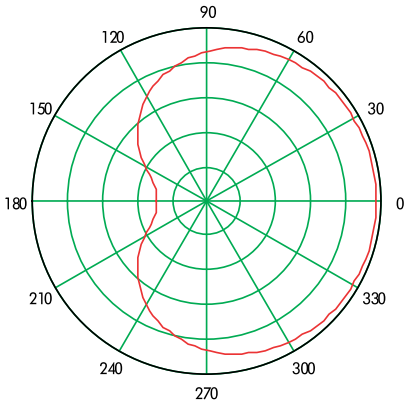

Cardioid dispersion pattern

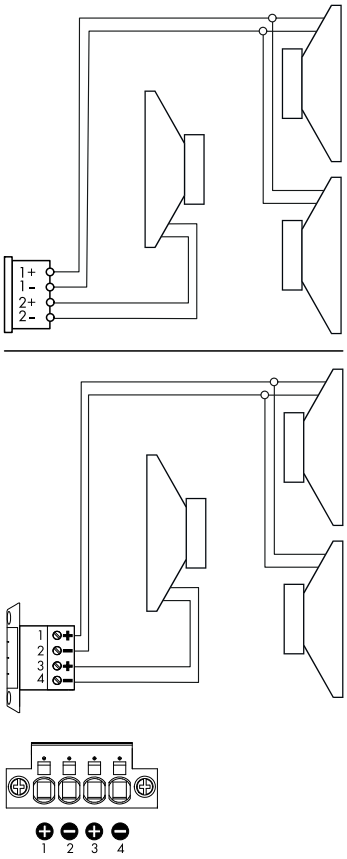

Connector wiring
NLT4 F
Phoenix option

Cardioid dispersion

Cardioid dispersion avoids unwanted energy behind the system and greatly reduces the excitation of the reverberant field at low frequencies providing the greatest accuracy of low frequency reproduction.

The subwoofers can be used as stand-alone solutions or in stacked combinations with a minimum distance of 60 cm (2 ft) between adjacent cabinets or between the subwoofers and a side wall. When positioned in front of walls, the minimum distance to rear walls should be 10 cm (0.3 ft).

Rigging components and arrays

The cabinets are mechanically connected using the rigging strands on both sides of the cabinet front and a central strand at the rear of the cabinet. All necessary rigging components are mounted on the cabinet and fold out or slide out when needed.

A detailed description of the rigging components is given in the respective rigging manuals.

2.2 Connections

The cabinets are fitted with a single NLT4 F connector using the pin assignment 1+/1– for the front drivers and pins 2+/2– for the rear driver.

Phoenix option

NOTICE!
Risk of damage to the system components!

Different pin assignment on the loudspeaker and amplifier.

⇒ Please refer to the corresponding amplifier manual.

Cabinets with the Phoenix option are fitted with a 4-pole Phoenix connector socket (type: DFK PC 4/4 GF) using the following pin assignment:

- Pins 1+/2– feeding the forward LF drivers.
- Pins 3+/4– feeding the rear LF driver.

Phoenix specifications and recommendations

The cabinet comes with a Phoenix plug (type: SPC 5/4 Push-in spring connector) which is already connected to the corresponding Phoenix socket of the cabinet.
The plug allows for direct wire connection without any tools depending on the cross-section and conductor structure.

Technical specifications

Conductor cross-section .....
Flexible, ferrule without plastic sleeve ..... up to 6 mm² (AWG 9)
Flexible, ferrule with plastic sleeve ..... up to 4 mm² (AWG 11)
Ferrule length (min/max) ..... 10/15 mm
Release tool ..... Flat-tip screwdriver 0.6 x 3.5 x 100 mm

Recommended connecting cable

d&b K3112.000.00 MC4 SWR ..... 4 x 4 mm² (AWG 11)
..... Ferrule without plastic sleeve (enclosed with the cabinet)

d&b LoadMatch
With the d&b four channel amplifier platform, the LoadMatch function enables the amplifier to electrically compensate for the properties of the loudspeaker cable used without the need for an additional sense wire. For applicable loudspeakers, LoadMatch is therefore independent of the connector type used.

2.3 Operation

Amplifier output mode(s): 2-Way Active		
Application	**Setup**	**Cabinets per pair of amplifier channels**
KSLi-SUB	KSL-SUB KSL-SUB AP KLS-SUB Fln	1 1 1
KSLi-GSUB	KSL-SUB KSL-SUB AP	1 1

In its standard mode, the KSLi-SUB/KSLi-GSUB can be used as subwoofer for applicable d&b loudspeaker systems operated in CUT mode. The two channels of the system are tuned to create a cardioid dispersion pattern thus providing maximum rejection to the rear. It can be used in flown or stacked combinations with a minimum distance of 60 cm (2 ft) between adjacent columns of cabinets.

AP setup
In connection with d&b ArrayProcessing (AP), the AP setup contains the AP data that is generated by the d&b ArrayCalc simulation software and transferred to the applicable amplifiers via the d&b Remote network (OCA/AES70) using R1.
As soon as the data has been sent to the amplifiers, the AP setup is automatically activated.

Fln setup
The "Fln" setup (flown setup) for KSLi-SUBs is meant to work as a low frequency extension for a flown KSLi-SUB array, which can either be part of a mixed array or a pure SUB column next to or behind an KSLi-TOP array.
Thus the setup is based on a higher cut-off frequency with improved phase alignment in the wider overlap region.

The setup allows both known configurations:
1. CUT for TOPs and Standard for SUBs.
2. Full range for TOPs and 100 Hz for SUBs.

The setup also includes the Coupling function to allow the configuration of TOPs and SUBs in one control group.
The INFRA mode is not applicable for this application and is therefore not available within this setup.

2.3.1 Controller settings
For acoustic adjustment, the INFRA mode and the Coupling function can be selected.

INFRA mode

With the INFRA mode selected, the frequency response of the system extends from 33 Hz to 75 Hz.
The KSLi-SUB/KSLi-GSUB can now be used to supplement applicable d&b loudspeaker systems operated in full range mode.

Coupling function

The Coupling function compensates for coupling effects between the cabinets by reducing the low and low-mid frequency level.

The SL-Series setups provide a two-stage filter (Low/Mid), which allows the independent shaping of the low and low-mid responses.

The characteristics of the Coupling function are shown in the diagram opposite. The standard setting (0) maintains the default array response. Coupling values can be set in the range from +5 to –5 (Low) and from 0 to –8 (Mid) in increments of 0.5.

Note: Please note that all cabinets within the array should be operated with the same Coupling setting.

When processed conventionally (Line/Arc), the larger the array the more attenuation by Coupling will be required to achieve a neutral response.

When operated with ArrayProcessing (AP), an array will automatically be provided with the system target response, as shown in the graphic opposite. All coupling effects caused by the array length and shape are considered in the AP data. The Coupling function may still be used for additional corrections, for example of room properties or coupling effects between main hangs and outfills.

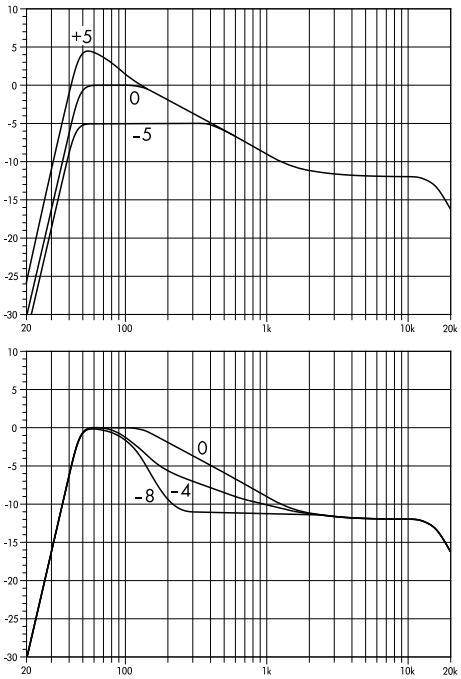

Frequency response correction of the Coupling function for low and low-mid fequency level*
*schematic diagram

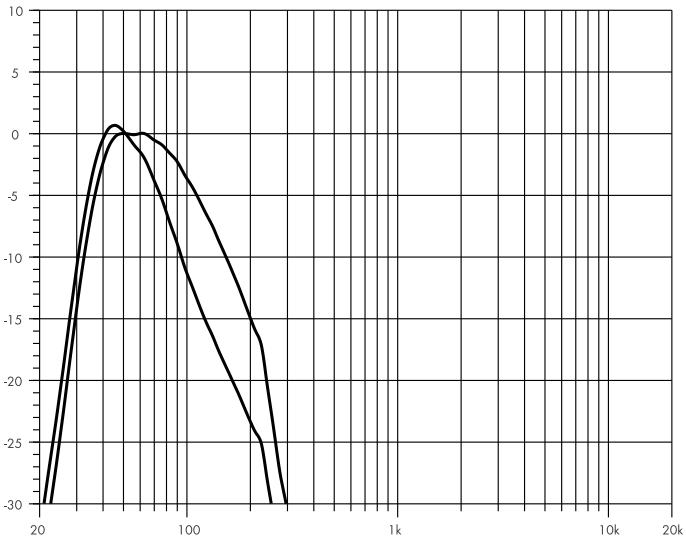

KSLi-SUB frequency response, standard and INFRA mode

2.4 Technical specifications

System data

Frequency response (–5 dB standard) ..... 36 Hz - 105 Hz
Frequency response (–5 dB INFRA mode) ..... 33 Hz - 75 Hz
Frequency response (–10 dB standard, IEC60268) ..... 33 Hz - 150 Hz
Frequency response (–10 dB INFRA mode, IEC60268) ..... 30 Hz - 95 Hz
Max. sound pressure (1 m, free field, broadband signal IEC60268) .....
KSLi-SUB/KSLi-GSUB with D90/D80/D40/40D ..... 139 dB

Loudspeaker data

Nominal impedance front/rear ..... 4/8 ohms
Power handling capacity front (RMS/peak 10 ms) ..... 900/3500 W
Power handling capacity rear (RMS/peak 10 ms) ..... 500/2000 W
Components ..... 3 x 15" driver
Connections ..... 1 x NLT4 F
Pin assignment .....
..... 1+: Front+/1–: Front– /2+: Rear+/2–: Rear–
Phoenix option ..... Phoenix socket (Type: DFK PC 4/4 GF)
..... Phoenix plug (Type: SPC 5/4)
Optional front splay (KSLi-SUB) ..... 0° or 2°
Weight KSLi-SUB ..... 82 kg (181 lb)
Weight KSLi-GSUB ..... 78 kg (172 lb)

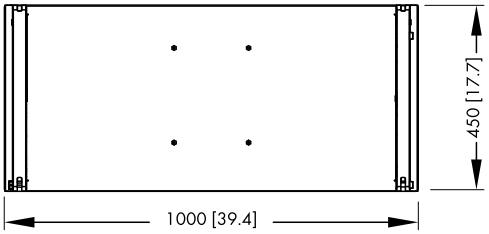

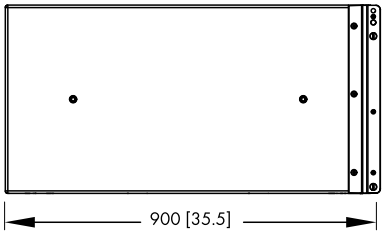

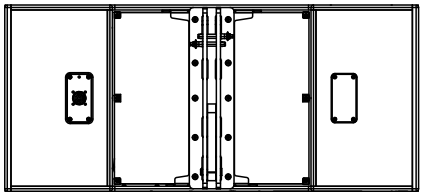

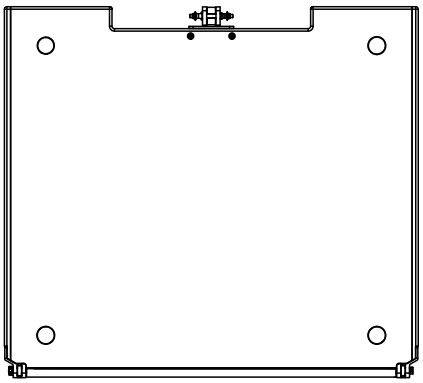

KSLi-SUB cabinet dimensions in mm [inch]*
*The same dimensions apply to the KSLi-GSUB

3.1 Conformity of loudspeakers

This declaration applies to:

- **d&b Z0795 KSLi-SUB loudspeaker**
- **d&b Z0796 KSLi-GSUB loudspeaker**

by d&b audiotechnik GmbH & Co. KG.

All product variants are included, provided they correspond to the original technical version and have not been subject to any later design or electromechanical modifications.

We herewith declare that said products are in conformity with the provisions of the respective directives including all applicable amendments.

Detailed and applicable declarations are available on request and can be ordered from d&b or downloaded from the d&b website at www.dbaudio.com.

3.2 WEEE Declaration (Disposal)

Electrical and electronic equipment must be disposed of separately from normal waste at the end of its operational lifetime.

Please dispose of this product according to the respective national regulations or contractual agreements. If there are any further questions concerning the disposal of this product, please contact d&b audiotechnik.

WEEE-Reg.-Nr. DE: 13421928

D2738.EN .01, 09/2026 © d&b audiotechnik GmbH & Co. KG

www.dbaudio.com

d&b audiotechnik