SL

XSL-SUB/XSL-GSUB
Manual 1.5 en

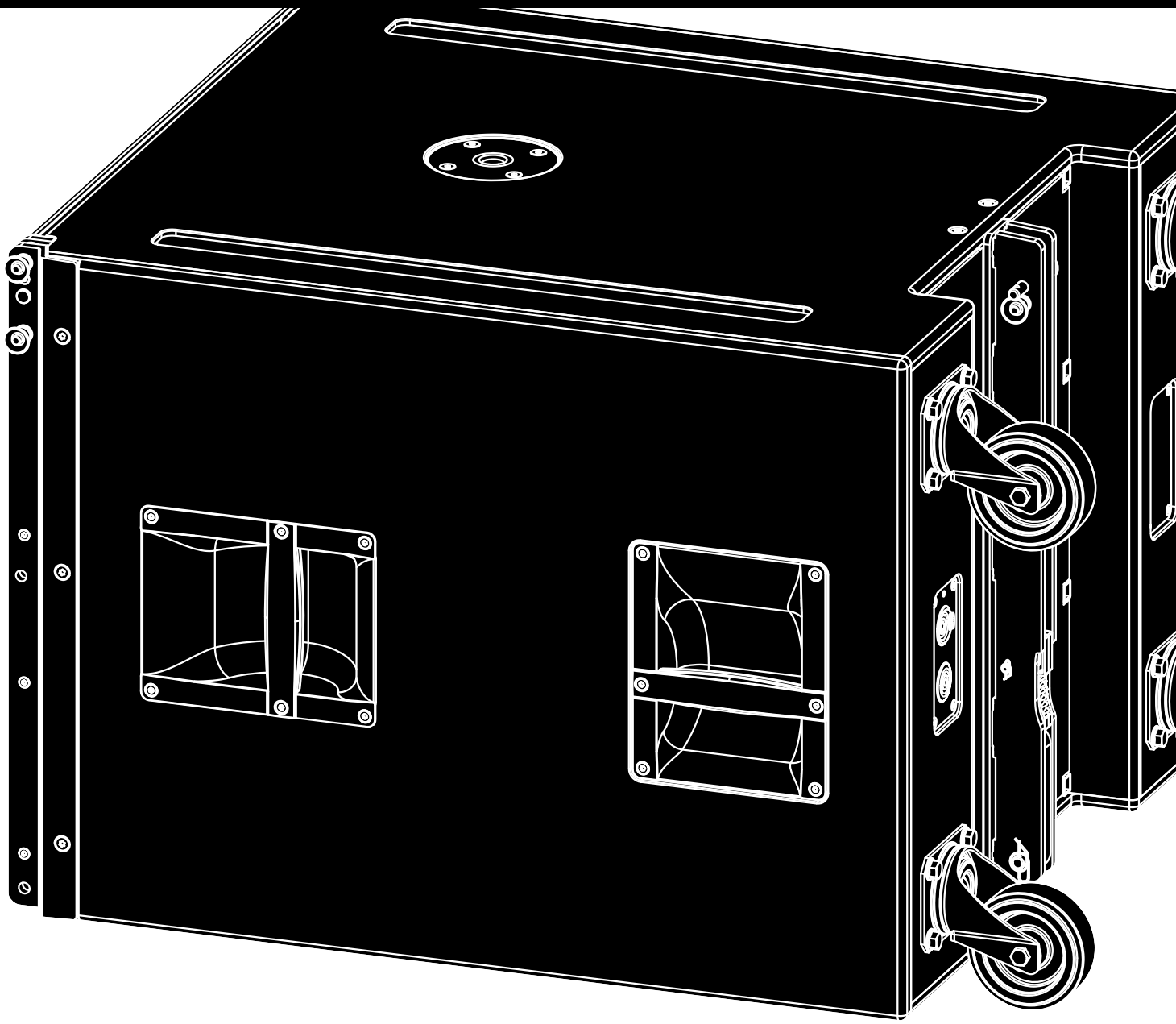

d&b audiotechnik

Notes on document version
All previous versions of this document are hereby no longer valid.

Version 1.5:
Revised edition with newly structured amplifier specification.

Refer to:
⇒ Chapter 2.1 “Intended use” on page 6
and
⇒ Chapter 2.4 “Technical specifications” on page 10

General information

XSL-SUB/XSL-GSUB Manual

Version: 1.5 en, 09/2026, D2753.EN .01

Copyright © 2026 by d&b audiotechnik GmbH & Co. KG; all rights reserved.

Keep this document with the product or in a safe place so that it is available for future reference.

We recommend you to regularly check the d&b website for the latest version of this document.

When reselling this product, hand over this document to the new owner.

If you supply d&b products, please draw the attention of your customers to this document. Enclose the relevant documents with the systems. If you require additional documents for this purpose, you can order them from d&b.

d&b audiotechnik GmbH & Co. KG
Eugen-Adolff-Str. 134, D-71522 Backnang, Germany
T +49-7191-9669-0, F +49-7191-95 00 00

Contents

1 Safety precautions **4**
1.1 d&b ArrayCalc 5
2 XSL-SUB/XSL-GSUB loudspeaker **6**
2.1 Intended use 6
2.2 Connections 7
2.3 Operation 7
2.3.1 Controller settings 8
2.4 Technical specifications 10
3 Manufacturer's declarations **12**
3.1 Conformity of loudspeakers 12
3.2 WEEE Declaration (Disposal) 12

Potential risk of personal injury

Never stand in the immediate vicinity of loudspeakers driven at a high level. Professional loudspeaker systems are capable of causing a sound pressure level detrimental to human health. Seemingly non-critical sound levels (from approx. 95 dB SPL) can cause hearing damage if people are exposed to it over a long period.

In order to prevent accidents when deploying loudspeakers on the ground or when flown, please take note of the following:

- When setting up the loudspeakers or loudspeaker stands, make sure they are standing on a firm surface. If you place several systems on top of one another, use straps to secure them against movement.
- Only use accessories which have been tested and approved by d&b for assembly and deployment. Pay attention to the correct application and maximum load capacity of the accessories as detailed in our specific "Mounting instructions" or in our "Rigging manuals".
- Ensure that all additional hardware, fixings and fasteners used for deployment are of an appropriate size and load safety factor. Pay attention to the manufacturers' instructions and to the relevant safety guidelines.
- Regularly check the loudspeaker housings and accessories for visible signs of wear and tear, and replace them when necessary.
- Regularly check all load bearing mounting devices.

Potential risk of material damage

Loudspeakers produce a static magnetic field even if they are not connected or are not in use. Therefore make sure when erecting and transporting loudspeakers that they are nowhere near equipment and objects which may be impaired or damaged by an external magnetic field. Generally speaking, a distance of 0.5 m (1.5 ft) from magnetic data carriers (floppy disks, audio and video tapes, bank cards, etc.) is sufficient.

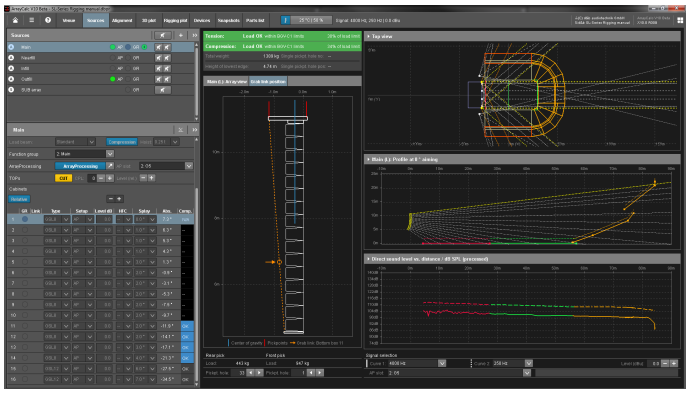

d&b ArrayCalc

1.1 d&b ArrayCalc

For both safety and acoustic reasons, d&b line arrays must be designed using the d&b ArrayCalc simulation software. The software is available as a native stand-alone application for both Microsoft Windows and Mac OS X operating systems and can be downloaded at www.dbaudio.com.

Detailed information on how to use and operate ArrayCalc is provided by the Help system of the software. To access the Help system, press F1 or select the Help button (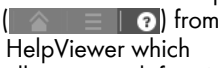) from the ArrayCalc toolbar. This will launch the HelpViewer which provides an overview of the program as well as a search function and direct access to the related topics.

In addition, ArrayCalc will provide you with typical array configurations within the permitted load limits and will help you get familiar with the mechanical load conditions and limitations.

d&b TI 385

Further information on line array design can be found in "TI 385 d&b Line array design, ArrayCalc". The TI is supplied with the software or can be downloaded from the d&b website at www.dbaudio.com.

d&b Seminar

We also recommend you to attend the regularly hosted d&b Line array training seminars. Further information regarding the d&b seminars and a seminar schedule can also be found on the d&b website at www.dbaudio.com.

d&b Video tutorials

In addition, d&b provides related video tutorials which can also be found on the d&b website at www.dbaudio.com or www.sl-series.com.

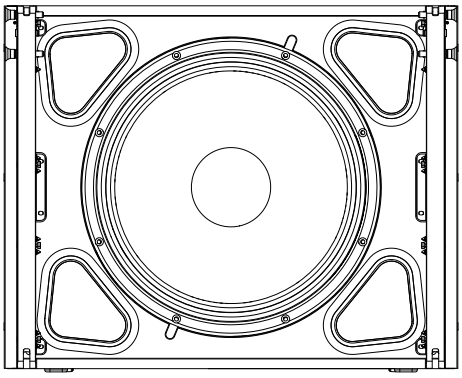

2.1 Intended use

NOTICE!

Only operate d&b SL-Series loudspeakers with the specified and correctly configured d&b amplifiers, otherwise there is a risk of damaging the loudspeaker components and the directional characteristics of the system cannot be achieved.

Recommended amplifiers:
D90/D80/D40/40D

Product description
The XSL-SUB and XSL-GSUB are the cardioid subwoofers for the XSL system. They can be used to supplement XSL8 and XSL12 cabinets, either flown (XSL-SUB) or ground stacked (XSL-GSUB).

When the Z5770 XSL Flying frame set is used, XSL-SUB cabinets can be flown as separate SUB columns or in mixed arrays together with XSL TOP cabinets using the additional Z5783 XSL-SUB Adapter frame.

Both cabinets are actively driven, 2-way bass-reflex designs housing two long excursion neodymium drivers. One 18" driver radiates towards the front while one 12" driver radiates towards the rear of the cabinet.

The front and rear drivers are driven by separate amplifier channels and operate in independent bass reflex chambers. Through its cardioid dispersion pattern, this setup avoids unwanted energy behind the system and greatly reduces the reverberant field at low frequencies providing highest accuracy in low frequency reproduction. The frequency response extends from 37 Hz to 110 Hz (35 Hz to 85 Hz - INFRA mode).

The cabinet enclosures are constructed from marine plywood and have an impact and weather protected 2K finish. The front and rear of the cabinets are protected by a rigid metal grill backed by an acoustically transparent and water repellent fabric. Each side panel incorporates two handles and mounted on the rear panel are four heavy duty wheels.
Two runners extend from the rear to the front panel of each cabinet protecting the bottom panel against scratching.
Two correspondingly shaped recesses are incorporated in the top panel of each cabinet to accept these runners and prevent cabinet movement when stacking XSL-GSUBs or XSL-SUBs.
An M20 threaded flange in the top panel accepts a corresponding pole for the deployment of TOP cabinets.

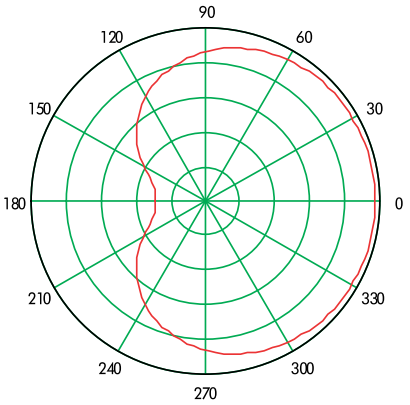

Cardioid dispersion pattern

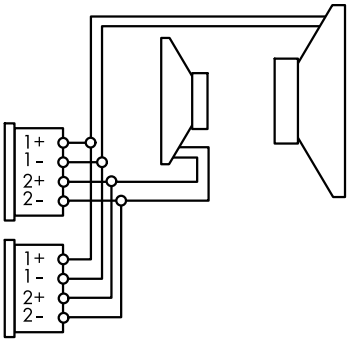

NLT4 F/M Connector wiring

Cardioid dispersion

Cardioid dispersion avoids unwanted energy behind the system and greatly reduces the excitation of the reverberant field at low frequencies providing the greatest accuracy of low frequency reproduction.

The subwoofers can be used as stand-alone solutions or in stacked combinations with a minimum distance of 60 cm (2 ft) between adjacent cabinets or between the subwoofers and a side wall. When positioned in front of walls, the minimum distance to rear walls should be 10 cm (0.3 ft) which is already maintained by the wheels mounted at the rear of the cabinet.

SL-Series rigging components and arrays

The cabinets are mechanically connected using the rigging strands on both sides of the cabinet front and a central strand at the rear of the cabinet.
All necessary rigging components are mounted on the cabinet and fold and/or slide out when needed.

A detailed description of the SL-Series rigging components is given in the respective rigging manuals.

2.2 Connections

The cabinets are fitted with NLT4 F/M connectors. All four pins of both connectors are wired in parallel using the following pin assignment:

- Pins 1+/1– feeding the front LF driver.
- Pins 2+/2– feeding the rear LF driver.

d&b LoadMatch

With the d&b four channel amplifier platform, the LoadMatch function enables the amplifier to electrically compensate for the properties of the loudspeaker cable used without the need for an additional sense wire. For applicable loudspeakers, LoadMatch is therefore independent of the connector type used.

2.3 Operation

Amplifier output mode(s): 2-Way Active		
Application	**Setup**	**Cabinets per pair of amplifier channels**
XSL-SUB	XSL-SUB XSL-SUB AP XSL-SUB Fln	2 1 2
XSL-GSUB	XSL-SUB XSL-SUB AP	2 1

In its standard mode, the XSL-SUB/XSL-GSUB can be used as subwoofer for applicable d&b loudspeaker systems operated in CUT mode. The two channels of the system are tuned to create a cardioid dispersion pattern thus providing maximum rejection to the rear. It can be used in flown or stacked combinations with a minimum distance of 60 cm (2 ft) between adjacent columns of cabinets.

AP setup
In connection with d&b ArrayProcessing (AP), the AP setup contains the AP data that is generated by the d&b ArrayCalc simulation software and transferred to the applicable amplifiers via the d&b Remote network (OCA/AES70) using R1.
As soon as the data has been sent to the amplifiers, the AP setup is automatically activated.

Fln setup
The "Fln" setup (flown setup) for XSL-SUBs is meant to work as a low frequency extension for a flown XSL-SUB array, which can either be part of a mixed array or a pure SUB column next to or behind an XSL-TOP array.
Thus the setup is based on a higher cut-off frequency with improved phase alignment in the wider overlap region.

The setup allows both known configurations:
1. CUT for TOPs and Standard for SUBs.
2. Full range for TOPs and 100 Hz for SUBs.

The setup also includes the Coupling function to allow the configuration of TOPs and SUBs in one control group.
The INFRA mode is not applicable for this application and is therefore not available within this setup.

2.3.1 Controller settings
Depending on the selected setup, for acoustic adjustment the 100 Hz (Fln setup) and INFRA modes (Standard setup) as well as the Coupling function can be selected.

100 Hz mode (Fln setup)
With the 100 Hz mode selected, the frequency range of the system is reduced to the range from 37 Hz to 85 Hz.
It can be used when actively driven SUB cabinets are used to supplement TOP cabinets operated in full range mode in a mixed array to compensate for the effect of close coupling between the SUB and TOP cabinets.

INFRA mode (Standard setup)
With the INFRA mode selected, the frequency response of the system extends from 35 Hz to 85 Hz.
The XSL-SUB/XSL-GSUB can now be used to supplement applicable d&b loudspeaker systems operated in full range mode.

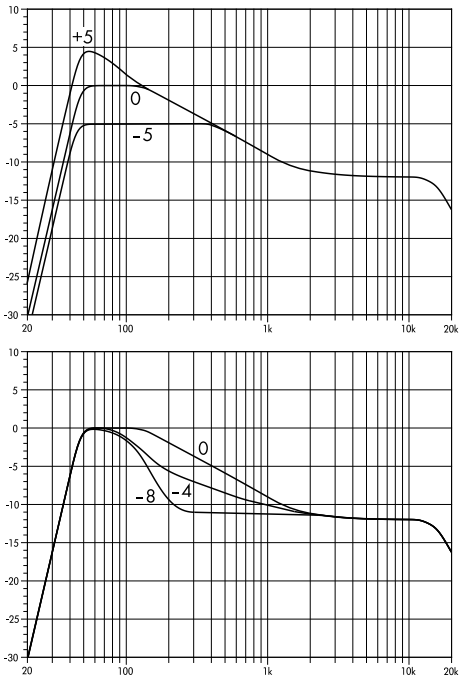

Frequency response correction of the Coupling function for low and low-mid fequency level*

*schematic diagram

Coupling function

The Coupling function compensates for coupling effects between the cabinets by reducing the low and low-mid frequency level.

The SL-Series setups provide a two-stage filter (Low/Mid), which allows the independent shaping of the low and low-mid responses.

The characteristics of the Coupling function are shown in the diagram opposite. The standard setting (0) maintains the default array response. Coupling values can be set in the range from +5 to –5 (Low) and from 0 to –8 (Mid) in increments of 0.5.

Note: Please note that all cabinets within the array should be operated with the same Coupling setting.

When processed conventionally (Line/Arc), the larger the array the more attenuation by Coupling will be required to achieve a neutral response.

When operated with ArrayProcessing (AP), an array will automatically be provided with the system target response, as shown in the graphic opposite. All coupling effects caused by the array length and shape are considered in the AP data. The Coupling function may still be used for additional corrections, for example of room properties or coupling effects between main hangs and outfills.

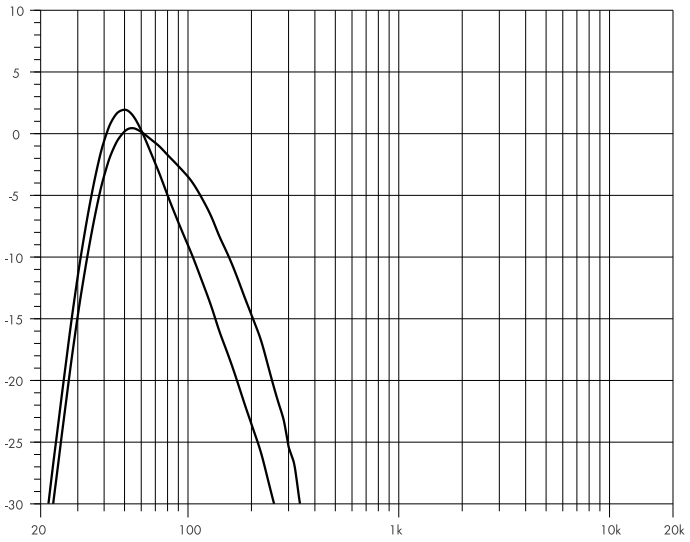

XSL-SUB frequency response, Standard and INFRA modes

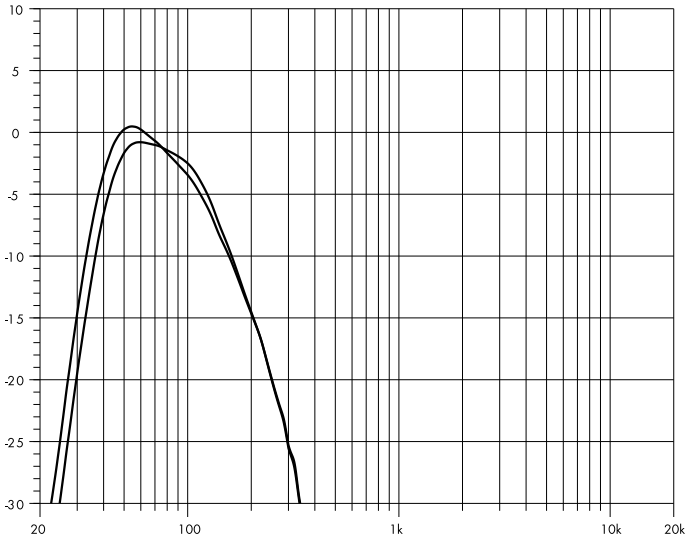

XSL-SUB frequency response, Fln setup - Standard and 100 Hz mode

2.4 Technical specifications

System data

Standard setup .....
Frequency response (–5 dB Standard) ..... 37 Hz - 110 Hz
Frequency response (–5 dB INFRA) ..... 35 Hz - 85 Hz
Frequency response (–10 dB standard, IEC60268) ..... 34 Hz - 140 Hz
Frequency response (–10 dB INFRA mode, IEC60268) ..... 32 Hz - 95 Hz
Fln setup .....
Frequency response (–5 dB Standard) ..... 40 Hz - 125 Hz
Frequency response (–5 dB 100 Hz) ..... 37 Hz - 85 Hz
Max. sound pressure (1 m, free field, broadband signal IEC60268) .....
with D90/D80/D40/40D ..... 137 dB

Loudspeaker data

Nominal impedance front/rear ..... 8/16 ohms
Power handling capacity front (RMS/peak 10 ms) ..... 700/1500 W
Power handling capacity rear (RMS/peak 10 ms) ..... 400/800 W
Components ..... 1 x 18" driver front/1 x 12" driver rear
Connections ..... 1 x NLT4 F/M
Pin assignment ..... 1+: Front+/1–: Front– /2+: Rear+/2–: Rear–
Optional front splay (XSL-SUB) ..... 0° or 2.5°
Weight XSL-SUB ..... 66 kg (146 lb)
Weight XSL-GSUB ..... 62 kg (136 lb)

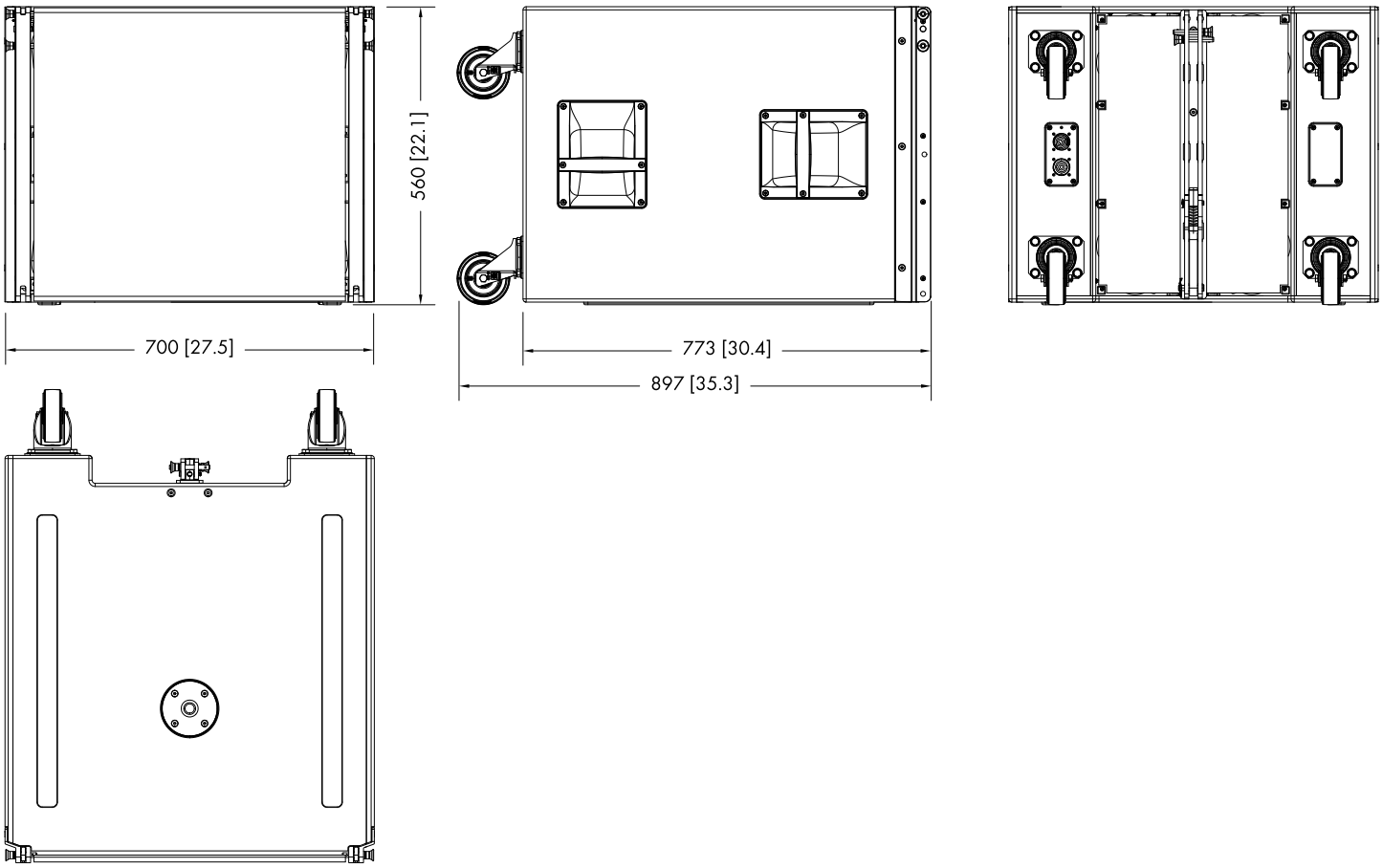

XSL-SUB cabinet dimensions in mm [inch]*
*The same dimensions apply to the XSL-GSUB

3.1 Conformity of loudspeakers

This declaration applies to:

- **d&b Z0774 XSL-SUB loudspeaker**
- **d&b Z0775 XSL-GSUB loudspeaker**

by d&b audiotechnik GmbH & Co. KG.

All product variants are included, provided they correspond to the original technical version and have not been subject to any later design or electromechanical modifications.

We herewith declare that said products are in conformity with the provisions of the respective directives including all applicable amendments.

Detailed and applicable declarations are available on request and can be ordered from d&b or downloaded from the d&b website at www.dbaudio.com.

3.2 WEEE Declaration (Disposal)

Electrical and electronic equipment must be disposed of separately from normal waste at the end of its operational lifetime.

Please dispose of this product according to the respective national regulations or contractual agreements. If there are any further questions concerning the disposal of this product, please contact d&b audiotechnik.

WEEE-Reg.-Nr. DE: 13421928

D2753.EN.01, 09/2026 © d&b audiotechnik GmbH & Co. KG

d&b audiotechnik